IBM Network Tape Access and Control System for AIX and IBM NetTAPE Tape Library Connection User's Guide and Reference

Document Number tape-info-05

Note!

Before using this information and the product it supports, be sure to read the general information under “Special Notices” on page vii.

Fourth Edition (August, 1996)

This edition applies to Version 1 Release 1 of the IBM Network Tape Access and Control System for AIX Licensed Program, program number 5765-637, and to all subsequent releases and modifications until otherwise indicated in new editions.

This edition also applies to Version 1 Release 1 of the IBM NetTAPE Tape Library Connection Licensed Program, program number 5765-643, and to all subsequent releases and modifications until otherwise indicated in new editions.

Order publications through your IBM representative or the IBM branch office serving your locality. Publications are not stocked at the address below.

IBM welcomes your comments. A form for readers' comments may be provided at the back of this publication, or you may address your comments to the following address:

International Business Machines Corporation
Department 55JA, Mail Station P384
522 South Road
Poughkeepsie, NY 12601-5400
United States of America

FAX (United States & Canada): 1+914+432-9405
FAX (Other Countries):
Your International Access Code +1+914+432-9405

IBMLink (United States customers only): KGNVMC(MHVRCFS)
IBM Mail Exchange: USIB6TC9 at IBMMAIL
Internet e-mail: mhvrcfs@vnet.ibm.com

If you would like a reply, be sure to include your name, address, telephone number, or FAX number.

Make sure to include the following in your comment or note:

- Title and order number of this book
- Page number or topic related to your comment

When you send information to IBM, you grant IBM a nonexclusive right to use or distribute the information in any way it believes appropriate without incurring any obligation to you.

© **Copyright IBM Corporation 1996. All rights reserved.**
Note to US Government users (documentation related to restricted rights): Use, duplication, or disclosure is subject to restrictions set forth in GSA ADP Schedule Contract with IBM Corporation.

Contents

Special Notices . . . vii
Trademarks and Service Marks . . . vii

About This Book . . . ix
Who Should Use This Book . . . ix
What's in This Book . . . ix
Where to Find Related Publications . . . x
General Information About This Book . . . xi
Special Terms . . . xi
Syntax Notation . . . xi
Finding and Using NetTAPE Documentation . . . xi
Manuals . . . xi
README files . . . xii
Tips and Other Useful Information . . . xii
Man Pages . . . xii
Downloading Files from the Anonymous FTP Server . . . xiii
What's New In This Book . . . xiv
Summary of Changes, November 1996 . . . xiv
Summary of Changes, August 1996 . . . xiv
Summary of Changes, May 1996 . . . xiv
Summary of Changes, April 1996 . . . xiv

Part 1. About NetTAPE . . . 1

Chapter 1. Introduction to NetTAPE and NetTAPE Tape Library Connection 3
How NetTAPE Helps System Administrators . . . 3
How NetTAPE Helps Tape Device Users . . . 4

Chapter 2. About the NetTAPE Graphical User Interface . . . 5
About the Main Screen . . . 5
Other Functions . . . 5

Chapter 3. Supported Hardware and Software . . . 7
Workstation Hardware . . . 7
Workstation Software . . . 7
NetTAPE Tape Device Support . . . 7
NetTAPE Tape Library Connection Tape Device Support . . . 8

Chapter 4. Operation of NetTAPE with Other Products . . . 9
Operation with ADSM . . . 9
Coexistence with CLIO/S . . . 9
Integration with Non-AIX Workstations . . . 10

Chapter 5. Notes for Users with Both NetTAPE and CLIO/S Installed . . . 11
Compatibility of NetTAPE and CLIO/S Interfaces . . . 11
Using NetTAPE and CLIO/S Together . . . 11
Differences between NetTAPE and CLIO/S . . . 11

Chapter 6. NetTAPE Restrictions . . . 13

© Copyright IBM Corp. 1996

Part 2. Configuring and Administering NetTAPE 15

Chapter 7. Once You've Installed NetTAPE 17
Getting NetTAPE Up and Running 17
Starting NetTAPE 17
Trying out NetTAPE Commands 18
Trying out the NetTAPE API 18
What To Do Next 19

Chapter 8. Configuring NetTAPE 21
Step 1: Defining Paths to Tape Devices with the parconf File 22
Determining Which Nodes to Define in Each parconf File 22
Defining the parconf File for the SP System 23
Defining the parconf File for each RISC System/6000 24
parconf Entry Syntax 24
Examples of parconf Entries 24
Step 2: Customizing the nettape.config File 26
Step 3: Customizing the nettape.adm.config File 27
Planning Your Device Pools 27
Specifying the NetTAPE Utility Daemon Port Number 29
Defining the User Access Control List 29
Specifying the Tape Libraries 30
Specifying the Retry Interval for the Tape Library Daemon 30
Handling Tape Library Tape Label Errors 31
Defining the Devices and the Device Pools 31
Specifying Shared Devices 34
Defining the Esoteric Device Pools 34
Defining the Default Device Pool 35
Specifying Default Scratch and Default Private Tape Categories 35
Controlling Mount Queue Processing 36
Specifying the AVR Daemon Scanning Interval 36
Sample nettape.adm.config File 37
Making Changes to nettape.adm.config Using the NetTAPE GUI 40
Step 4: Customizing Your .netrc File 41
Defining NetTAPE's /.netrc Files 41
Verifying Your .netrc Entries 41
Defining the System Administrator's .netrc File 41
Defining the Users' .netrc File 41

Chapter 9. Administering NetTAPE 43
Understanding NetTAPE Daemons 44
Starting or Restarting NetTAPE 46
Stopping the NetTAPE Status Daemon 46
Starting the NetTAPE GUI 46
Adding or Deleting Devices from NetTAPE 47
Understanding NetTAPE Tape Device States 47
Resetting a Tape Device 48
Reserving a Tape Device 48
Sharing a NetTAPE Tape Device with an MVS System 49
Managing Device Pool Mount Queues 49

Chapter 10. Administrative Commands 51
cltopr—Issuing an NetTAPE operator command 52

cltoprg—Starting the NetTAPE Operator Graphical User Interface 60
cltterm—Stopping the NetTAPE Tape Client Daemon 62

Chapter 11. Troubleshooting Tips for the Administrator 63
Finding NetTAPE Error Logs 63
The Status Daemon and Tape Library Daemons 63
Tape Client Daemon 63
GUI Message Log 63
System Error Log 64
Failure to Deallocate Tape Devices 64
Failure Restarting NetTAPE 64
Setting NetTAPE Environment Variables for Debugging 64

Part 3. Using NetTAPE 67

Chapter 12. Introduction to Using NetTAPE 69
Allocating and Using Tapes 69
Using NetTAPE Commands 69
Using the NetTAPE API 70
Determining the Available Device Pools for Your Allocation Request 70
Obtaining Volume Information Using the VFILE Option 71
Understanding MVS Tape Formats 72
Record formats 72
Volumes, Files and Data sets 72
Markers 73
Label Types 73
File and Volume Mark Sequences 74
BOV Mark Sequence 74
BOF Mark Sequence 74
EOF mark sequence 74
EOV mark sequence 75
Understanding NetTAPE Tape Positioning 75
Unlabeled Tapes 75
ANSI or Standard Labeled Tapes 75
Bypass Label Processing 76
Suppressing End of Volume Processing 76
Suppressing End of File Processing 76
Understanding NetTAPE End of Tape Handling 76
Writing to Remote Tape Devices 76

Chapter 13. Troubleshooting Tips for Users 77

Chapter 14. Commands 79
cltalloc—Allocating a tape device 81
cltclose—Closing the volume information file 91
cltopen—Accessing the next tape file 93
cltunall—Unallocating a tape device 99
cltvols—Obtaining information about tape volumes used 100

Chapter 15. Application Programming Interfaces 103
Compiling, Linking, and Running with the NetTAPE API 103
Finding the NetTAPE API Examples File 103
ctpalloc or tpalloc—Allocating a tape device 104

ctpclose or tpclose—Closing the tape file 110
ctpopen or tpopen—Opening the tape file 111
ctpread or tpread—Reading the tape 117
ctprew or tprew—Rewinding the tape 118
ctpskpf or tpskpf—Skipping tape files 119
ctpskpr or tpskpr—Skipping tape records 120
ctpunall or tpunall—Unallocating a tape device 121
ctpvols or tpvols—Obtaining information about tape volumes used 122
ctpweof or tpweof—Writing tape marks 123
ctpwrite or tpwrite—Writing to tape 124
NetTAPE Tape Interface Return Values and Messages 125

Appendix A. NetTAPE Commands Usage Examples 129
Using tar with Labeled Tapes 129
Using tar, cpio, dd, and backup/restore with Multi-volume Data Sets 129
Using the backup/restore Commands 130
Using the cpio Command 131
Using DB2 PE Database's backup/restore Commands 132

Appendix B. NetTAPE API Usage Examples 133
Example 1 133
Example 2 135

Index 139

Special Notices

References in this publication to IBM* products, programs, or services do not imply that IBM intends to make these available in all countries in which IBM operates. Any reference to an IBM product, program, or service is not intended to state or imply that only IBM's product, program, or service may be used. Any functionally equivalent product, program, or service that does not infringe any of IBM's intellectual property rights or other legally protectible rights may be used instead of the IBM product, program, or service. Evaluation and verification of operation in conjunction with other products, programs, or services, except those expressly designated by IBM, are the user's responsibility.

IBM is exclusively responsible for sales, service, and support for the IBM Network Tape Access and Control System for AIX and IBM NetTAPE Tape Library Connection products.

IBM may have patents or pending patent applications covering subject matter in this document. The furnishing of this document does not give you any license to these patents. You can send license inquiries, in writing, to:

IBM Director of Licensing
IBM Corporation
500 Columbus Avenue
Thornwood, NY 10594
USA

Licensees of this program who wish to have information about it for the purpose of enabling: (i) the exchange of information between independently created programs and other programs (including this one) and (ii) the mutual use of the information which has been exchanged, should contact:

IBM Corporation
Mail Station P300
522 South Road
Poughkeepsie, NY 12601-5400
USA
Attention: Information Request

Such information may be available, subject to appropriate terms and conditions, including in some cases, payment of a fee.

Trademarks and Service Marks

The following terms are trademarks of the IBM Corporation in the United States or other countries or both:

AIX
RISC System/6000 Scalable POWERparallel Systems

IBM
ADSTAR

RISC System/6000
Scalable POWERparallel Systems
MVS/ESA

UNIX is a registered trademark in the United States and other countries, licensed exclusively through X/Open Company Limited.

© Copyright IBM Corp. 1996

Other company, product, and service names, which may be denoted by a double asterisk (* *), may be trademarks or service marks of others.

About This Book

This book is a guide and reference manual for using IBM Network Tape Access and Control System for AIX and IBM NetTAPE Tape Library Connection., referred to as NetTAPE and NetTAPE TLC respectively. The book includes:

- A high-level overview of NetTAPE
- How NetTAPE and IBM's Client Input/Output Sockets (CLIO/S) can coexist on the same network
- How to configure and administer NetTAPE
- How to allocate and access tape devices using NetTAPE commands
- How to allocate and access tape devices using NetTAPE application programming interfaces

Who Should Use This Book

This book is written for users who administer, manage, or use tape devices:

- System programmers
- System administrators
- Tape device operators
- Application developers
- End users

This book assumes the user is familiar with the AIX operating system (environment variables, shells). The chapter describing the programming interfaces assumes that the user is familiar with C or FORTRAN language programming.

The type of knowledge you need to have depends on which NetTAPE functions you plan to use.

- System programmers and system admistrators are assumed to know how to configure and support the tape devices they plan to use with NetTAPE
- Application programmers and end users are assumed to be familiar with tape allocation and access functions, as well as general concepts related to the use of tape devices such as tape formats and tape labels.
- Operators are assumed to be familiar with the tape allocation and management procedures normally performed without the use of NetTAPE.

What's in This Book

This book includes the following sections:

- **Front Matter**

  Contains the Table of Contents, Special Notices, and Preface. Use these to find or interpret information in the book.

- **Part 1, About NetTAPE**

  This section gives an introduction to NetTAPE. Read this chapter first to get an overview of the product and identify the sections of the book devoted to the information you need.

© Copyright IBM Corp. 1996

- **Part 2, Configuring and Administering NetTAPE**

  This section tells you how to configure, administer, and run the NetTAPE product.

- **Part 3, Using NetTAPE**

  This section describes the NetTAPE command line and application programming interfaces. It also explains some basic tape device concepts you'll need to know.

Where to Find Related Publications

Here's a list of related programming and hardware publications you may find useful:

- *AIX Version 3.2 Technical Reference: Base Operating System and Extensions, Volumes 1, 2, and 3*, SC23-2382, SC23-2383, and SC23-2384

  These three publications describe the AIX socket calls.

- *AIX Version 3.2 Communication Programming Concepts*, SC23-2206

  This publication is an overview of AIX socket programming.

- *AIX Version 3.2 Problem Solving Guide and Reference*, SC23-2204, *AIX Version 4.1 Problem Solving Guide and Reference*, SC23-2606, and *AIX Version 4.1 Software Debugging and Reporting for the RISC System/6000*, GG24-2513

  This publication explains how to debug AIX system hardware and software problems.

- *Internetworking with TCP/IP, Volumes 1 and 2*, SC31-6144 and SC31-6145

  These publications describe TCP/IP programming concepts.

- *MVS/ESA Data Administration Guide*, SC26-4505

  This publication describes MVS tape record formats.

- *MVS/DFP Using Magnetic Tape Labels and File Structure*, SC26-4565

  This publication helps you understand MVS/DFP processing of magnetic tape labels.

- *IBM SCSI Device Drivers: Installation and User's Guide*, GC35-0154

  This publication explains how to install and use the IBM SCSI Tape Drive and Library Device Drivers.

- *IBM AIX Parallel and ESCON Channel Tape Attachment/6000*, GA32-0311

  This publication explains how to install and use the IBM Parallel Channel Tape Attachment/6000 product and the ESCON Channel Tape Attachment/6000 product.

- *ADSM V2R1 AIX Administrator's Guide*, SH35-0134

  This publication explains how to administer the ADSTAR Distributed Storage Manager Version 2 Release 1.

- *AIX Tape Management*, SG24-4705

  This publication describes approaches and techniques for managing tape drives in an AIX environment.

General Information About This Book

The following sections explain terminology, syntax, and other information you need to use this book.

Special Terms

Standard data processing terms are used in this book.

The term workstation includes both RISC System/6000 workstations and RISC System/6000 Scalable POWERparallel Systems (SPs).

This book covers two products, NetTAPE and NetTAPE Tape Library Connection. Within this book, both products are simply referred to as NetTAPE. References to the following, however, apply only to the NetTAPE Tape Library Connection:

- IBM 3494 and 3495 Tape Library Dataservers
- StorageTek (STK) Tape Library devices.

References to STK Tape Library devices include all supported STK devices. See Chapter 3, “Supported Hardware and Software” on page 7 for a complete list.

Syntax Notation

Here's how to interpret the syntax used in this book:

- AIX is case sensitive, so AIX commands and file names should be entered exactly as shown. These are shown in bold face type, for example, **/etc/parconf**.
- Subroutine names and programming language elements should be entered exactly as shown.
- Parameters for which you substitute an appropriate value, such as *volser*, are in italic type face.
- Machine names, such as ***AIXnode***, are in bold italics.
- Square brackets (**[ ]**) enclose optional items in syntax diagrams.
- The notation <**ctrl-***x*> indicates a control character sequence. For example, <**ctrl-c**> means that you hold down the control key while pressing the character **c**.

Finding and Using NetTAPE Documentation

This section describes how to access the different different types of information provided with NetTAPE.

Manuals

NetTAPE includes the following manuals:

- *IBM Network Tape Access and Control System for AIX General Information*, GC23-3990.

  This publication provides a high level overview of NetTAPE and NetTAPE Tape Library Connection, and discusses their major features and benefits.

  This document is available in these ways:

  - You can order printed copies from the IBM Distribution Center.
  - You can download a PostScript listing from the anonymous FTP server. "Downloading Files from the Anonymous FTP Server" on page xiii describes how to connect to the server and download the file.

    You can also view or download this book from the IBM RS/6000 web site at **http://www.rs6000.ibm.com**.

- *IBM Network Tape Access and Control System for AIX and IBM NetTAPE Tape Library Connection User's Guide and Reference*, no order number.

  This document, which you are reading now, is available as a listing you can browse or print for yourself. You can get it one of these ways:

  - A listing formatted for a PostScript printer is included in the NetTAPE product in **/usr/lpp/nettape/doc/nettape_users_guide.ps**.
  - You can also download a PostScript-formatted listing of the latest version of this book from the anonymous FTP server. This listing is refreshed as needed to give you access to the latest NetTAPE information."Downloading Files from the Anonymous FTP Server" on page xiii describes how to connect to the server and download the files.

    You can also view or download this book from the IBM RS/6000 web site at **http://www.rs6000.ibm.com**.

README files

The README files for NetTAPE and NetTAPE Tape Library Connection contain important information about the products including installation instructions and release notes. The README files are:

- **/usr/lpp/nettape/README**
- **/usr/lpp/nettape_tlc/README**
- **/usr/lpp/nettape/doc/nettape_gui.README**
- **/usr/lpp/nettape_tlc/doc/library_config.README**

Tips and Other Useful Information

In addition to the latest version of this book, you can download other NetTAPE-related information, such as performance tips, from the anonymous FTP server. See"Downloading Files from the Anonymous FTP Server" on page xiii for downloading instructions.

Man Pages

The man pages are in the **/usr/lpp/nettape/man** structure. Because this is not one of the directories automatically read by the AIX **man** command, use one of these ways to indicate which man page directories should be searched:

- Specify the **-M** *manpath* flag when you invoke the **man** command. For example, you can display the NetTAPE man pages using

  ```
  man -M/usr/lpp/nettape/man  topic
  ```

- Set the MANPATH environment variable to the top of the man page structure. Consult the reference information for the AIX operating system for information about setting MANPATH.

Man pages are in the following directories:

- User commands are installed in /**usr**/**lpp**/**nettape**/**man**/**cat1**.
- Subroutines are installed in /**usr**/**lpp**/**nettape**/**man**/**cat3**
- Administrative commands are installed in /**usr**/**lpp**/**nettape**/**man**/**cat8**.

Tips on Using Man Pages

To view a NetTAPE man page, specify by name any of the NetTAPE commands or subroutines when you invoke the **man** command. For example, `man cltalloc.` displays the man page for the **cltalloc** command. Man page names are case sensitive. Specify the name in the case shown in this manual.

For more efficient information retrieval, include the number of the man page section when you issue the **man** command. For instance, to view the man pages for the NetTAPE subroutines, which are in section three of the manual, issue:

```
man 3 ctpalloc
```

Downloading Files from the Anonymous FTP Server

To copy files from the anonymous FTP server, use **ftp** to connect to **lscftp.kgn.ibm.com** and login with user ID anonymous, using your Internet address as the password.

The NetTAPE manuals are:

- /**pub**/**pps**/**nettape**/**nettape_gi.ps.Z**
- /**pub**/**pps**/**nettape**/**nettape_users_guide.ps.Z**

The files are compressed. Uncompress them using the AIX **uncompress** command and print them as you print other PostScript files.

You'll also find other information such as hints, tips, and late-breaking information in /**pub**/**pps**/**nettape**. Download these PostScript files and print them on a PostScript printer.

What's New In This Book

Summary of Changes, November 1996

This edition contains minor technical and editorial corrections. Changed lines are marked by a vertical bar '|' in the left margin. Changes include the following:

- "Allocating and Using Tapes" on page 69 describes how to use NetTAPE to perform a sequence of tape operations.
- Appendix A, "NetTAPE Commands Usage Examples" on page 129 shows examples of using NetTAPE commands to perform different tasks.
- Appendix B, "NetTAPE API Usage Examples" on page 133 shows examples of using th NetTAPE API to perform different tasks.
- Chapter 6, "NetTAPE Restrictions" on page 13 documents the restriction on the use of effective userids.
- Information has been clarified regarding the location and contents of the **.netrc** file entries for NetTAPE.

Summary of Changes, August 1996

This edition contains minor technical and editorial corrections. Changed lines are marked by a vertical bar '|' in the left margin. Changes include the following:

- The description of the **bf** parameter of the **ctpvols** subroutine has been corrected.
- NetTAPE supports labeled tapes on 8mm devices but only for single volume data sets.

Summary of Changes, May 1996

This edition contains corrections and enhancements provided by APARs PN84690 and PN84692, as well as technical and editorial improvements. Changed lines are marked by a vertical bar '|' in the left margin. Changed information includes the following:

- The volume information file now contains the type of tape label for the volume (al, sl, or nl).
- You can now override the device pool specified in the volume information file using the **-P** option on the **cltalloc** command or the **POOL=** option on the **ctpalloc** subroutine.
- The **MAX_DATA** option, which was erroneously listed as a parameter for the **ctpopen** subroutine, has been deleted.

Summary of Changes, April 1996

This edition contains corrections and enhancements provided by APARs PN82965 and PN82968. Changed lines are marked by a vertical bar '|' in the left margin.

Part 1. About NetTAPE

Chapter 1. Introduction to NetTAPE and NetTAPE Tape Library Connection 3

Chapter 2. About the NetTAPE Graphical User Interface 5

Chapter 3. Supported Hardware and Software 7

Chapter 4. Operation of NetTAPE with Other Products 9

Chapter 5. Notes for Users with Both NetTAPE and CLIO/S Installed . . . 11

Chapter 6. NetTAPE Restrictions 13

© Copyright IBM Corp. 1996

Chapter 1. Introduction to NetTAPE and NetTAPE Tape Library Connection

NetTAPE improves and simplifies tape operations management and tape device access in networks of RISC System/6000, RS/6000 SP systems, or both. NetTAPE offers:

- Consolidated tape operations for all network tape devices from a single graphical user interface
- Transparent user access to remote tape devices using either a command line interface or a programming interface.

NetTAPE Tape Library Connection builds on NetTAPE, adding support for robotic tape library devices. These devices include the IBM 3494 and IBM 3495 Tape Library Dataservers and StorageTek** Tape Library devices. NetTAPE is a prerequisite product for NetTAPE Tape Library Connection.

For a complete list of supported tape devices, see Chapter 3, “Supported Hardware and Software” on page 7.

How NetTAPE Helps System Administrators

NetTAPE lets you set up your tape operation in the way that is most beneficial to your organization. One or more operators can manage a group of tape devices from a single workstation or multiple workstations, using either a Motif/X-Window System-based graphical user interface or a set of commands. Figure 1 on page 6 shows a sample operator screen.

With NetTAPE you can:

- **Consolidate Control of Distributed Tape Operations**

  NetTAPE provides a single system image of all of the network's tape devices. Tape device allocation, mount queue management, and tape device monitoring functions are performed using a graphical user interface.

- **Customize Operator Views of Tape Operations**

  NetTAPE allows you to assign each tape device to an operator domain. Using the NetTAPE GUI, operators limit the display of tape devices to those in their own domain. They see only the devices for which they are responsible.

- **Use Tape Device Pools to Process Mount Requests More Efficiently**

  NetTAPE lets you create pools of tape devices, organized by device type. With device pools, mount requests for a certain type of device can be satisfied by any device in the pool. As a result, mount requests can be processed more quickly and efficiently.

- **Support for Advanced Tape Devices and Features**

  NetTAPE Tape Library Connection supports advanced tape devices such as the IBM 3494 and 3495 Tape Library Dataservers, and StorageTek Tape Libraries. It also supports the automatic cartridge loading functions of several types of tape devices. NetTAPE lets installations take advantage of the

© Copyright IBM Corp. 1996

large-capacity and automatic features of these tape devices in an AIX environment.

- **Coexistence with ADSM and CLIO/S**

  NetTAPE works with IBM's ADSTAR Distributed Storage Manager (ADSM) for AIX Version 2.1 and can coexist on the same network with IBM's CLIO/S. IBM 3494 and 3495 Tape Library Dataservers and StorageTek Tape Libraries assigned to ADSM can also be used by NetTAPE, allowing you to make better use of tape resources.

How NetTAPE Helps Tape Device Users

- **Easy Tape Device Allocation**

  Users can allocate and access tape devices anywhere in the network without needing to specify a particular device. NetTAPE uses dynamic tape device allocation and installation-defined device pools to deliver this capability.

  Devices of each type are grouped into device pools. Rather than requesting a certain tape device on a certain node, users can simply request a device of a certain type by specifying its device pool. And with device pools, a mount request can be satisfied by any device in the pool, so it has a better chance of being fulfilled.

  For users who don't require a particular type of device, installation-specified defaults can simplify the mount request process even further by letting users issue mount requests without specifying even a device pool.

- **Transparent Access to Remote Tape Devices**

  NetTAPE lets users access tape devices on remote nodes as if the devices were locally attached, so standard AIX commands such as **tar** can be used.

- **Access to Tape Data in Multiple Formats, on Multiple Platforms**

  Users can read tapes that were created on either AIX or MVS systems. Users can also create tapes in formats that can be read on either AIX or MVS systems. NetTAPE supports a variety of IBM and ANSI standard tape formats, as well as the unlabeled tape format that is standard on AIX systems. With NetTAPE, users can easily move tape data between systems on different platforms, allowing more flexibility in deciding where to create and process data.

- **Command Line and Programming Interfaces**

  NetTAPE provides a command line interface as well as C and FORTRAN application programming interfaces for tape device allocation and data access functions.

Chapter 2. About the NetTAPE Graphical User Interface

The NetTAPE GUI lets operators monitor and manage tape devices in a network of IBM RISC System/6000 servers, IBM RS/6000 SP nodes, or both.

This topic gives an overview of the NetTAPE GUI and the tasks you can perform with it. Once you bring up the operator GUI, you can access the online help system for assistance in performing specific tasks.

About the Main Screen

NetTAPE's main screen, which is shown in Figure 1 on page 6, is the focal point for monitoring and managing your tape devices. The screen is divided into three parts:

Status display	Lists information about each tape device
Mount message area	Displays application-initiated mount and unmount requests that require operator action.
General message area	Displays NetTAPE informational messages.

From the main screen you can:

- See the status of each tape device
- See the jobs running on each tape device
- Change the status of a particular tape device:
  - Bring up the device
  - Bring down the device
  - Reserve the device
  - Reset the device
- Initiate certain tape drive functions such as scanning the cartridges in a device with an automatic cartridge facility
- View user or application-initiated mount requests
- Process mount requests
- Transfer a mount request to a different device in the same device pool
- Cancel a mount request.

Other Functions

Other NetTAPE GUI functions, accessible from the menu bar, let you:

- Add a new device to your configuration, either temporarily or permanently
- Delete a device from your configuration, either temporarily or permanently
- Change the order of a mount request in the queue for a certain device or delete a queued mount request
- Change the tape devices currently being displayed, by specifying a different operator domain
- View the NetTAPE message log.

© Copyright IBM Corp. 1996

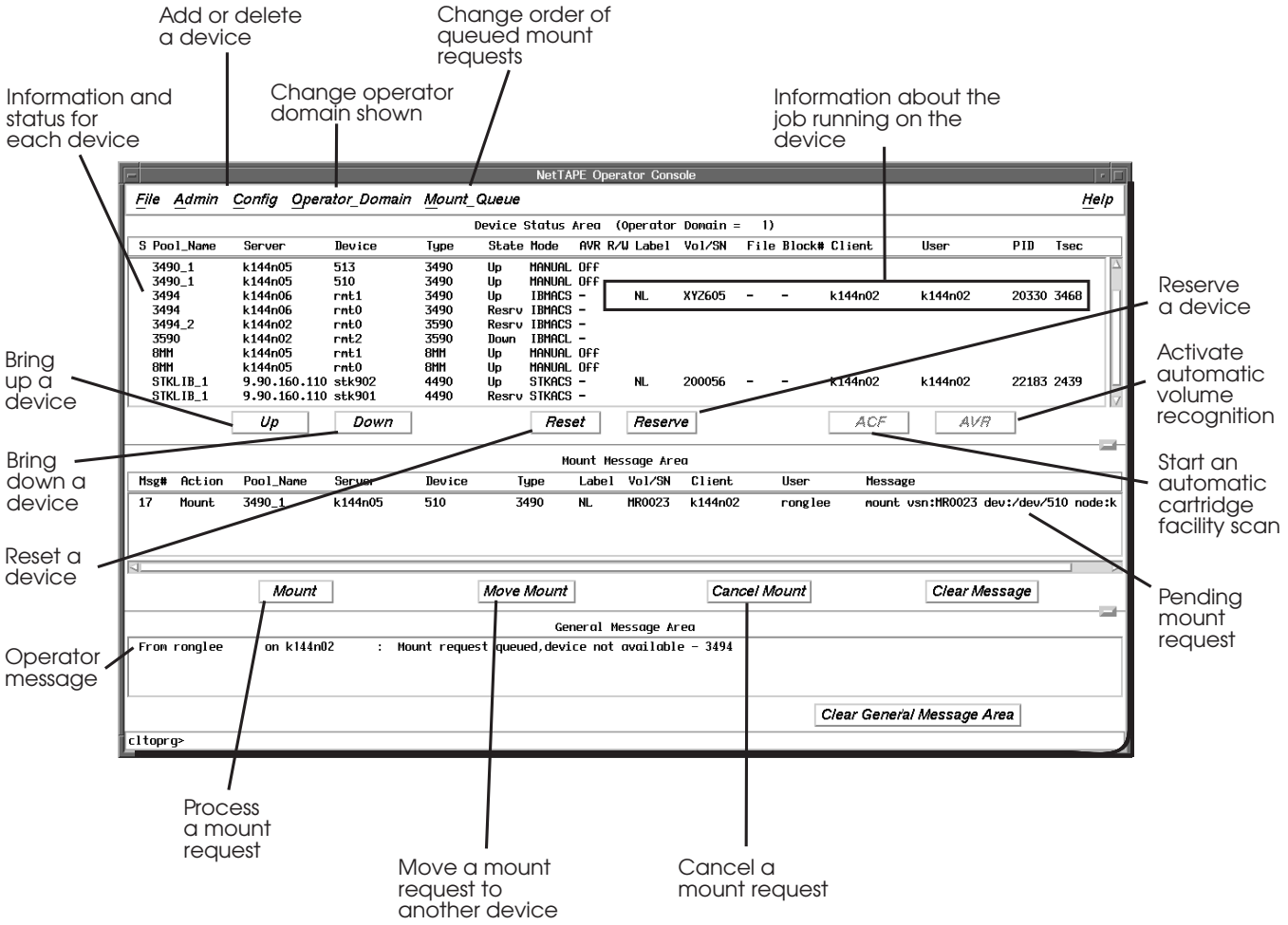

Figure 1. NetTAPE Operator GUI

Chapter 3. Supported Hardware and Software

The following sections list the hardware and software requirements for NetTAPE and NetTAPE Tape Library Connection.

Workstation Hardware

NetTAPE and NetTAPE Tape Library Connection can run on all IBM RISC System/6000 workstations.

NetTAPE and NetTAPE Tape Library Connection use TCP/IP for the transfer of data between workstations. The TCP/IP connection can use any hardware supported by TCP/IP, including the High Performance Switch, Fiber Distributed Data Interface (FDDI), ATM, FCS, Ethernet, or token-ring.

Workstation Software

NetTAPE requires one of the following products:

- IBM AIX Version 3.2.5 (program number 5756-030)
- IBM AIX Version 4.1.4 (program number 5765-393).

NetTAPE Tape Library Connection requires the following product:

- IBM Network Tape Access and Control System for AIX Release 1 (program number 5765-637).

NetTAPE Tape Device Support

NetTAPE supports the tape devices listed below when they are attached to an AIX workstation. For information about the software and hardware requirements for attaching these devices to the AIX workstation, see the hardware documentation for the devices.

- The Ampex DST** 310 Tape Drive

  This Ampex product is supported but not warranted by IBM.
- The IBM 3420 Magnetic Tape Unit
- The IBM 3480 Magnetic Tape Subsystem, including support of the automatic cartridge loader (ACL) in serial mode
- The IBM 3490 Magnetic Tape Subsystem Enhanced Capability Models C10, C11, and C22, including support of the automatic cartridge loader (ACL) in serial mode
- The IBM 3490 Magnetic Tape Subsystem Enhanced Capability Models E01 and E11, including support of the Cartridge Stack Loader in serial mode
- The IBM 3490E Magnetic Tape Subsystem, including support of the automatic cartridge loader (ACL) in serial mode
- The IBM 3590 High Performance Tape Subsystem, including support of the Automatic Cartridge Facility (ACF) in random or serial mode.

© Copyright IBM Corp. 1996

Other tape devices, which have not been explicitly tested, such as STK devices that emulate an IBM 3480 or 3490, are supported but not warranted.

In addition, NetTAPE provides limited tape processing support for devices that are supported by the standard AIX SCSI tape device driver. NetTAPE does not support tape label processing or record format handling for these devices. NetTAPE allows access to these devices as no-label tapes only (standard UNIX format).

The following types of tape drives are currently supported by the AIX SCSI tape device driver. You can use SMIT to list all of the supported tape drives and to configure them to AIX.

- 4mm tape drives of various capacities, such as the IBM 7206 Model 005 External 4mm Tape Drive
- 8mm tape drives of various capacities, such as the IBM 7208 Model 011 External 8mm Tape Drive
- 1/4-inch tape drives of various capacities, such as the IBM 7207 Model 012 External 1/4-inch Cartridge Tape Drive
- 1/2-inch, 9-track tape drives, such as the IBM 9348 Model 012 Tape Drive.

NetTAPE allows twin-tailed tape devices to be shared by multiple NetTAPE workstations or by a NetTAPE workstation and an MVS system.

NetTAPE Tape Library Connection Tape Device Support

When installed with its prerequisite product, NetTAPE, NetTAPE Tape Library Connection adds support for the tape devices listed below when they are attached to an AIX workstation. For information about the software and hardware requirements for attaching these devices to the AIX workstation, see the hardware documentation for the devices.

- The IBM 3494 Tape Library Dataserver
- The IBM 3495 Tape Library Dataserver
- The StorageTek WolfCreek** 9360 Automated Cartridge System.

  This StorageTek product is supported but not warranted by IBM.

NetTAPE Tape Library Connection uses the StorageTek Client System Component (CSC) Developer's Toolkit Version 2.1 which interfaces with the StorageTek Automated Cartridge System Library Server (ACSLS). Applications, such as NetTAPE Tape Library Connection, that are written to the ACSLS interface should have access to any existing StorageTek tape libraries. Other StorageTek tape library devices that are supported by the StorageTek ACSLS interface are also expected to function with NetTAPE Tape Library Connection. Examples of these devices, which have not been explicitly tested by IBM, are the following:

- The StorageTek 4400 Automated Cartridge Subsystem
- The StorageTek PowderHorn** 9310/9311 Automated Cartridge Subsystem.

Chapter 4. Operation of NetTAPE with Other Products

This chapter describes the operation of NetTAPE with other products.

Operation with ADSM

NetTAPE can be used to share tape devices dynamically between multiple AIX applications, including ADSM for AIX Version 2.1 servers. With NetTAPE Tape Library Connection, supported devices for this sharing include the IBM 3494 and 3495 Tape Library Dataservers and StorageTek tape library devices.

NetTAPE provides a code module named cladsmd, which the ADSM/6000 Version 2.1 server uses to perform the following functions:

- Volume mounts (specific and scratch)
- Volume unmounts
- Freeing of library volumes (return to scratch)

Using NetTAPE with ADSM also requires the following:

- You must specify the following ADSM server DEFINE LIBRARY command:

  ```
  DEFine LIBRary library_name LIBType=EXTernal EXTERNALManager=/usr/bin/cladsmd
  ```

  where *library_name* is a valid NetTAPE device pool name. See *ADSM V2R1 AIX Administrator's Guide* for more information.
- For IBM 3490 and 3590 tape devices, use mtdd (IBM AIX parallel and ESCON channel tape attachment/6000 device driver) or Atape (IBM SCSI device driver). For SCSI tape devices other than an IBM 3490 or 3590, use ADSM tape device drivers.
- At least two tape drives within the device pool must be physically attached to the workstation where the ADSM server is running.
- The default scratch category for the specified device pool name is used to mount scratch tapes for the ADSM server.
- The default private category is used to store ADSM tapes.
- Add the user ID of the ADSM server process to the **stsdmn.operators** user access control list in **nettape.adm.config**

See Chapter 8, “Configuring NetTAPE” on page 21 for more information.

Coexistence with CLIO/S

The optional Tape Server feature of the Client Input Output/Sockets (CLIO/S) program (program number 5648-129) provides basic support of remote tapes. NetTAPE and CLIO/S can coexist on the same AIX system, providing complementary functions.

If you want to allow AIX users to access MVS tapes or allow MVS users to access AIX tapes, you must install CLIO/S (with the Tape Server feature) on both MVS and AIX.

© Copyright IBM Corp. 1996

If you install NetTAPE (with or without NetTAPE Tape Library Connection) and CLIO/S (with the Tape Server feature) on the same AIX workstation, they do not interfere with each other. On an AIX workstation that has both, NetTAPE looks at the syntax of the command or function call that was issued and passes it to CLIO/S if appropriate.

Integration with Non-AIX Workstations

This release of NetTAPE supports only AIX workstations.

Chapter 5. Notes for Users with Both NetTAPE and CLIO/S Installed

The following information is for installations that have both CLIO/S (program number 5648-129) and NetTAPE installed.

Compatibility of NetTAPE and CLIO/S Interfaces

NetTAPE fully supports CLIO/S V2.1 (or later) command line and application programming interfaces for which there are NetTAPE equivalents. However, NetTAPE command line and application programming interfaces are not supported by CLIO/S. For instance, both NetTAPE and CLIO/S support the **cltalloc** tape device allocation command but the NetTAPE version is a superset of the CLIO/S version and is therefore not downwardly compatible.

NetTAPE uses the following differences between the NetTAPE and CLIO/S interfaces to recognize and properly route CLIO/S commands and function calls:

- For the command line interface, the presence of **-f** /**dev**/**pst*** (where * is a character string) indicates a CLIO/S command.
- For the application programming interface, the presence of the **allocparms** parameter with either of the following values indicates a CLIO/S function call:
  - /**dev**/*, where * is a character string
  - **DD=**

Note that you can allocate and access NetTAPE devices only using NetTAPE commands and function calls.

Using NetTAPE and CLIO/S Together

All devices in **nettape.adm.config** are controlled by NetTAPE and cannot be used by CLIO/s or any other tape access method.

Use CLIO/S commands and API only for accessing MVS tape devices. Use NetTAPE commands and API for all AIX-only processing.

Differences between NetTAPE and CLIO/S

- CLIO/S tape pseudo devices (sometimes referred to as tape pseudo device drivers in the CLIO/S documentation) are configured by the administrator. They remain in existence until they are explicitly deleted.
- NetTAPE tape pseudo devices are created dynamically as part of device allocation and are deleted automatically as part of device unallocation. Therefore, the tape pseudo device files (device special files) for a particular tape pseudo device exist only in the interval between device allocation and unallocation.

© Copyright IBM Corp. 1996

Chapter 6. NetTAPE Restrictions

NetTAPE has the following restrictions:

Effective User ID You cannot issue NetTAPE commands from an effective user ID, meaning one assumed using the **su** or **ksu** command to login as another user ID.

© Copyright IBM Corp. 1996

Part 2. Configuring and Administering NetTAPE

Chapter 7. Once You've Installed NetTAPE 17

Chapter 8. Configuring NetTAPE 21

Chapter 9. Administering NetTAPE 43

Chapter 10. Administrative Commands 51

Chapter 11. Troubleshooting Tips for the Administrator 63

© Copyright IBM Corp. 1996

Chapter 7. Once You've Installed NetTAPE

Instructions for NetTAPE, and NetTAPE TLC are in the following README files:

- **/usr/lpp/nettape/README**
- **/usr/lpp/nettape_tlc/README**

This chapter, which assumes that you have read and followed the instructions in the README files, guides you through the remaining steps to start NetTAPE and try out its functions.

Getting NetTAPE Up and Running

1. Go to Chapter 8, “Configuring NetTAPE” on page 21 and create the necessary files.
2. To install your **nettape.config** and **parconf** files on multiple workstations, copy the customized **nettape.config** and parconf files into a globally-mounted file system directory and do one of the following:
   - If the **dsh** command is supported, issue:

     ```
     dsh -a /usr/bin/ln -sf /your_directory/nettape.config /etc/nettape.config
     dsh -a /usr/bin/ln -sf /your_directory/parconf /etc/parconf
     ```

   - If **dsh** is not available, create symbolic link on each workstation to the **nettape.config** and **parconf** files.

     ```
     ln -sf /your_directory/nettape.config /etc/nettape.config
     ln -sf /your_directory/parconf /etc/parconf
     ```

Starting NetTAPE

To start NetTAPE:

- At the workstation whose host name you specified for **stsdmn.hostname** in **nettape.config** (and only on this host), issue the following to start the NetTAPE status daemon:

  ```
  cltopr –S pvl
  ```

- Follow the instructions in **/usr/lpp/nettape/doc/nettape_gui.README** for customizing and starting the NetTAPE operator GUI. Although this README specifies that you can start the operator GUI using the **xcltopr** shell script, you can also use the **cltoprg** command.
- If you have NetTAPE TLC installed, follow the instructions for configuring IBM 3494/3495 and STK tape libraries in **/usr/lpp/nettape_tlc/doc/library_config.README**.
- If you have IBM 3494 or 3495 tape libraries, start the IBM tape library daemon using either of these commands:

  ```
  cltopr -S 3494d -L library_name (to start on local host)
  cltopr -S 3494d -L library_name –h host_name (to start on remote host)
  ```

  Once the IBM tape library daemon has started, the IBM tape libraries are placed in the up state in the operator GUI's device status display.

© Copyright IBM Corp. 1996

- If you have STK tape libraries, start the STK tape library daemon using either of these commands:

  ```
  cltopr -S silod -L library_name (to start on local host)
  cltopr -S silod -L library_name –h host_name (to start on remote host)
  ```

  Once the STK tape library daemon has started, the STK tape libraries are placed in the up state in the operator GUI's device status display.

Trying out NetTAPE Commands

To allocate a device, open a tape file, and write to it:

1. From your host system, issue:

   ```
   cltalloc -f mytape -P poolname
   ```

   where *mytape* is the name of the device special file for the tape pseudo device you want created and *poolname* is a device pool name defined in **nettape.adm.config**. To see what pool names and devices are available, you can issue the **cltopr -q** command or you can look at the device status display in the NetTAPE operator GUI.

2. A tape mount message is displayed in the operator GUI. Select the message and click the **Mount** button to mount the tape.

3. If the command is successful:

   - Two device special files are created for you in the /**dev** directory on your host system. These are /**dev**/**pst***x* and /**dev**/**pst***x***.1**, where *x* is an integer.
   - The files, *mytape* and *mytape***.1**, are created in your current directory and linked to /**dev**/**pst***x* and /**dev**/**pst***x***.1**, respectively.
   - A tape client daemon process, **cltclntd -f** /**dev**/**pst***x*, is started on your host system.
   - You are assigned a tape device from the device pool you have specified.

4. To write to the device, issue:

   ```
   tar -cvf mytape filename
   ```

5. When you are finished, unallocate the device by issuing:

   ```
   cltunall -f mytape
   ```

   The tape device is released and all related device special files are deleted, The *mytape* and *mytape***.1** files are also deleted. Finally, the tape client daemon is terminated.

Trying out the NetTAPE API

Two sample C programs are located in the /**usr**/**lpp**/**nettape**/**samples**/**api** directory.

1. Modify one of them by changing POOL=3480 to one of your device pool names and by changing VOLUME=XYZ300 to your volser.

2. Use the **make** command to build the sample program:

   ```
   make -f Makefile.sample
   ```

3. Run the sample program.

4. A tape mount message is displayed in the operator GUI. Select the message and click the **Mount** button to mount the tape.
5. If the program is successful, informational messages are issued to tell you what the program is doing.

What To Do Next

Now that you've configured and brought up NetTAPE, and tried the command line and application programming interfaces, read Chapter 9, “Administering NetTAPE” on page 43 for a description of the administrative tasks you might need to perform.

Chapter 8. Configuring NetTAPE

To set up your NetTAPE configuration, you need to customize the NetTAPE configuration files located in **/usr/lpp/nettape/samples/config**. Users, including the system administrator, also need to update their **.netrc** file. The steps involved in configuring NetTAPE are described in the next few sections. These are:

- "Step 1: Defining Paths to Tape Devices with the parconf File" on page 22
- "Step 2: Customizing the nettape.config File" on page 26
- "Step 3: Customizing the nettape.adm.config File" on page 27
- "Step 4: Customizing Your .netrc File" on page 41

NetTAPE configuration files contain information that NetTAPE needs to run, such as the paths to each tape device and the specific attributes of each tape device in the network.

NetTAPE uses the configuration files listed in the following table.

Table 1. Configuration Files Used by NetTAPE

File Name	Created by	Purpose	Page	Notes
/etc/parconf	Administrator	Specifies paths to each tape device	22	Each user needs access
/etc/nettape.config	Administrator	Identifies the location of the status daemon.	26	Each user needs access
/etc/nettape.adm.config	Administrator	Defines the tape devices in the configuration.	27	Used by the status daemon
$HOME/.netrc	Administrator, user	Used to make a connection to a remote host	41	Used by NetTAPE and other services.

© Copyright IBM Corp. 1996

Step 1: Defining Paths to Tape Devices with the parconf File

The **parconf** file contains the information NetTAPE uses to locate tape devices and determine how to connect to them. Each user of NetTAPE services must have access to a **parconf** file on the host that starts the client program. A sample **parconf** file, which you can customize, is located in **/usr/lpp/nettape/samples/config**. You need to ensure access to a **parconf** file from each node through which NetTAPE services will be accessed. The **parconf** file must be in **/etc/parconf**.

Determining Which Nodes to Define in Each parconf File

The **parconf** file consists of a series of one-line entries, each defining a unique nickname. You must include an entry for each node associated with a tape device to be accessed through NetTAPE. If a node associated with a tape device is to be accessed using more than one path, such as through a LAN and through a fiber distributed data interface (FDDI), then separate entries must be specified for each path.

To route I/O to a node through a High Performance Switch, specify the node using its High Performance Switch node ID.

The following example shows the **parconf** file entries needed for a sample configuration. Specific information about the syntax of **parconf** entries is presented in “parconf Entry Syntax” on page 24. A sample configuration is shown in Figure 2 on page 23. It consists of:

- An 8-node RISC System/6000 SP system connected by a LAN to three RISC System/6000 workstations.
- SP node, **spn04**, linked to **rs6k01** through an FDDI connection.
- Tape devices attached to the following nodes:
  - **sp2n02**
  - **rs6k01**
  - **rs6k02**

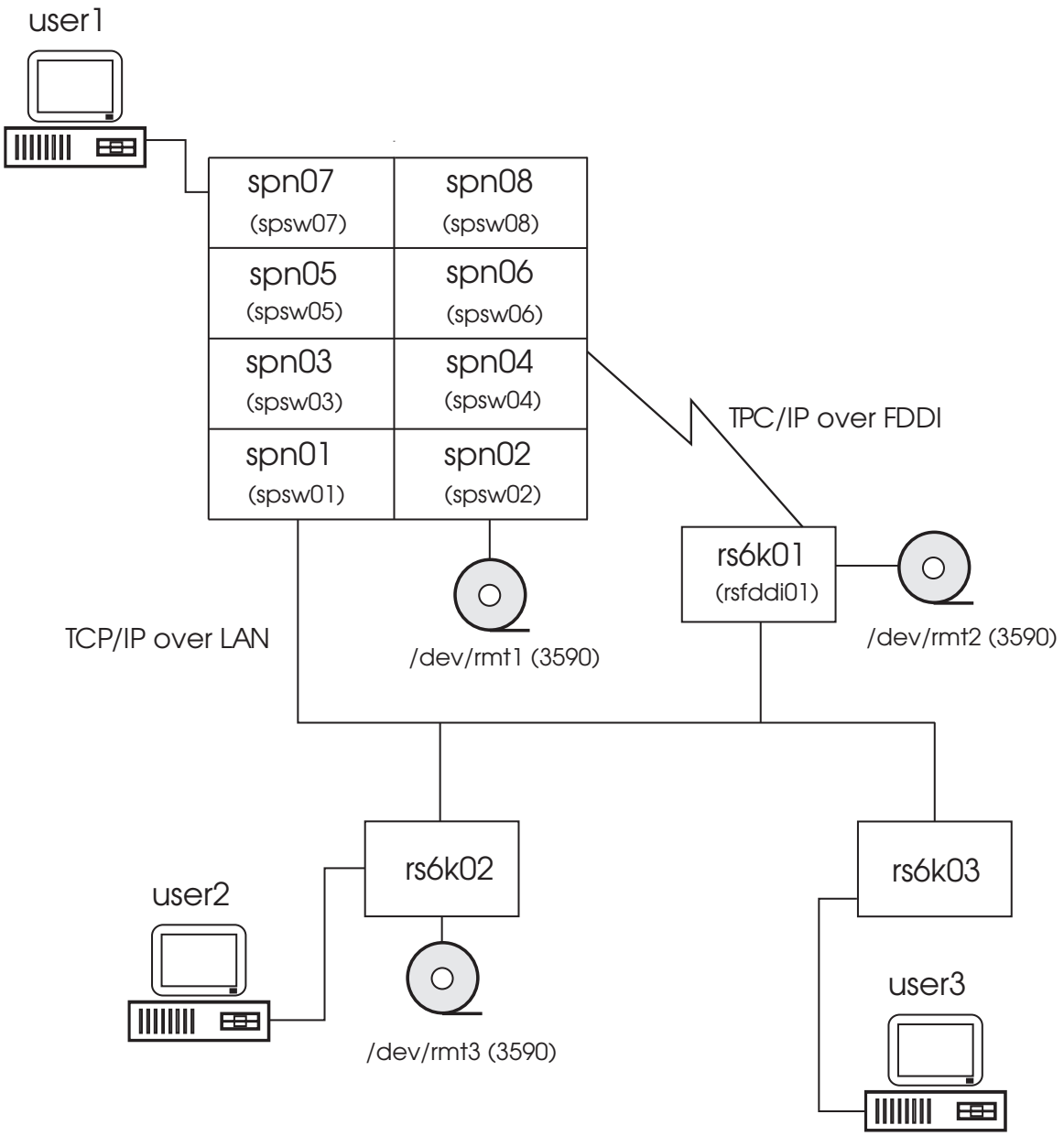

Figure 2. Configuration used to illustrate how to set up **parconf** *files.*

Defining the parconf File for the SP System

The nodes on the SP system share access to a single **parconf** file. The **parconf** file needs to contain an entry for:

- **spsw02**, the High Performance Switch node ID of the SP node to which **/dev/rmt1** is attached
- **rs6k01**, the RISC System/6000 node to which **/dev/rmt2** is attached. This entry specifies the path to the device through FDDI
- **rs6k02**, the RISC System/6000 node to which **/dev/rmt3** is attached.

Defining the parconf File for each RISC System/6000

Each **parconf** file needs to contain an entry for:

- **spn02**, the SP node to which /**dev**/**rmt1** is attached
- **rs6k01**, the RISC System/6000 node to which /**dev**/**rmt2** is attached. This entry specifies the path to the device through the LAN, not through the FDDI connection
- **rs6k02**, the RISC System/6000 node to which /**dev**/**rmt3** is attached.

The **parconf** entries for this sample configuration are shown in "Examples of parconf Entries."

parconf Entry Syntax

A **parconf** entry has the following syntax: *nickname type protocol nodeaddress*

Where:

nickname Is an arbitrary name chosen for the node. The name must be unique within the **parconf** file.

A nickname can contain any characters except:

- an at sign (@)
- a colon (:)
- a comma (,)

type Represents the processor type:

1 RISC System/6000 or SP node

protocol Specifies the communication method:

1 TCP/IP

nodeaddress Is the internet address (long or short text, or dotted decimal). If you use the dotted decimal IP address, you can prefix it with an at sign (@) to indicate that NetTAPE should not use the name server to resolve the IP address. For example,

```
risc1   1  1  @150.20.30.5
```

The **parconf** file can contain blanks, blank lines, and comments. Any text following a pound sign (#) is treated as a comment.

Examples of parconf Entries

Here are the entries for the **parconf** files for the sample configuration shown in Figure 2 on page 23:

- **For the SP System parconf file:**

```
spsw02   1   1  spsw02.pok.ibm.com   # Path to /dev/rmt1 on node
                                      # spsw02 through the High
                                        # Performance Switch

rsfddi01  1   1  @111.22.33.4          # Path to /dev/rmt2 on node
                                        # rsfddi01 through FDDI

rs6k02    1   1  rs6k02.pok.ibm.com    # Path to /dev/rmt3 on node
                                        # rs6k02
```

- **For each RISC System/6000 parconf file:**

```
spn02     1   1  spn02.pok.ibm.com     # Path to /dev/rmt1 on node
                                        # spn02

rs6k01    1   1  @111.22.33.6          # Path to /dev/rmt2 on node
                                        # rs6k01 through LAN

rs6k02    1   1  rs6k02.pok.ibm.com    # Path to /dev/rmt3 on node
                                        # rs6k02
```

Step 2: Customizing the nettape.config File

The **nettape.config** file is used to specify information needed by NetTAPE to configure the status daemon. You need to create **nettape.config** on each node where NetTAPE is to be installed.

Copy and modify for your use one of the sample **nettape.config** files located in **/usr/lpp/nettape/samples/config**, then store the customized file in **/etc/nettape.config**.

Note

If you're not already familiar with the NetTAPE daemons and their roles, read "Understanding NetTAPE Daemons" on page 44. This information will help you understand the daemon values you have to set in the NetTAPE configuration files.

Customize your **nettape.config** file as follows:

1. Specify the name of the host where the NetTAPE status daemon (called nettaped) is to run using **stsdmn.hostname**. Do not use a High Performance Switch node ID as the host name.

   For example:

   ```
   stsdmn.hostname  k80n05    # host the NetTAPE status daemon runs on
   ```

   Note

   For NetTAPE to work correctly, there must only be one instance of the status daemon running and it must run on the host you specify here.

2. Specify the port number where the NetTAPE status daemon is to run using **stsdmn.portno**. For instance:

   ```
   stsdmn.portno    3401      # port number for NetTAPE status daemon
   ```

3. Register the port number of the status daemon in the **/etc/services** file for your network. This step is optional but recommended:

   ```
   nettaped port_num/tcp
   ```

4. Specify the interval (in number of tape records) between updates of the tape position information on the NetTAPE GUI's device status display using **client.tapepos**. Tape position information is shown in the status display under the headings "File" and "Blocks", where the value for File is the current file number and the value for Blocks is the current block being processed. This information is useful to the operator for monitoring tape drive activity, however, there is a performance cost due to the data gathering involved.

   If you omit this option, tape position information is neither collected nor displayed.

   client.tapepos must be an integer of 100 or greater. For instance:

   ```
   client.tapepos  100
   ```

Step 3: Customizing the nettape.adm.config File

The **nettape.adm.config** file specifies information needed by NetTAPE to allocate devices, manage mount queues, and display information through the GUI. You need to create **nettape.adm.config** file only on the server nodes where the status daemon is to run.

nettape.adm.config has the following functions:

- Controls access to NetTAPE functions
- Defines tape libraries
- Defines device pools and esoteric device pools
- Creates a default device pool
- Establishes default scratch and private categories
- Configures mount queue characteristics
- Defines operator domains, allowing operators to see only the devices for which they are responsible.

You can copy and modify for your use one of the sample **nettape.adm.config** files located in **/usr/lpp/nettape/samples/config**. The customized file must be stored in **/etc/nettape.adm.config**. "Sample nettape.adm.config File" on page 37 shows the sample **nettape.adm.config** file. The information you need to specify in the **nettape.adm.config** file is explained below. Excerpts of the sample **nettape.adm.config** file shown in 37 are included with explanatory text in the following sections.

Note

The NetTAPE status daemon will not start if it encounters an error in **nettape.adm.config** or if any device is defined more than once.

Planning Your Device Pools

Before customizing **nettape.adm.config**, you need to:

1. Select the tape devices to be included in the NetTAPE configuration
2. Logically group those devices into pools by device type
3. Logically group the device pools into esoteric device pools
4. Select a default device pool

Device Pools

A *device pool*, also known as a *tape pool*, is a named group of tape devices **of a particular type** (such as 3490 or 3590).

Device pools make it easier for applications to obtain access to tape devices. A mount request for a device in a device pool can be satisfied by any device in that pool. A user or application issues a mount request specifying only the name of the device pool, rather than a specific device. Because any available device in the device pool can be assigned to the application, the chance of satisfying the request is much greater.

Esoteric Device Pools

You can further organize your device pools into esoteric device pools. An *esoteric device pool* is a pool of device pools.

Note

All devices in a device pool or in an esoteric device pool must be the same device type. You cannot combine devices of different types.

Suppose you create two separate device pools of IBM 3490 devices to group your 3490 tape devices by server. You might then define an esoteric device pool consisting of all 3490 devices. The esoteric device pool would contain the two 3490 pools. Note that you are limited to a maximum of three pool levels:

- Level 1: a device pool
- Level 2: an esoteric device pool consisting of multiple device pools
- Level 3: an esoteric device pool consisting of esoteric device pools (as defined in Level 2) or a combination of esoteric pools and device pools.

Users and applications can specify esoteric device pools just as they would ordinary device pools, with the additional benefit of having an even larger pool of devices available from which to satisfy the request.

Note

To let users know about the esoteric device pools, you'll need to provide them with a list. The **cltopr** **–q** command, which returns device information, lists the device pool for the device but omits any esoteric device pools to which the device might also belong. Note also that esoteric device pool mount queues cannot be viewed or changed using the NetTAPE operator GUI.

Although the **cltopr** command and the operator GUI permit you to add devices to or delete devices from existing device pools in your configuration, you can define new device pools only by adding them manually to the **nettape.adm.config** file.

If you have one or more manual device pools of a certain type, you should also define an esoteric device pool containing all of these device pools. Do this even if you have only a single device pool for that device type because you might need to add another one later on and having an esoteric device pool will make this easier.

Having an esoteric device pool for manual device pools also prevents users from having problems when they use the volume information file option (VFILE) for allocation or for opening tape files. Because each volume information file is permanently associated with the device pool where it was created, users who don't specify an esoteric device pool are limited to the device pool they selected when they created their volume information file. For more information, see “Obtaining Volume Information Using the VFILE Option” on page 71.

Default Device Pools

Once you have determined the device pools for your configuration, you need to select a default device pool. If a mount request omits a device pool name, a device from the default device pool is used to satisfy the request. Within the default device pool, a locally-attached device is chosen when possible. You can use an esoteric device pool as your default device pool.

Specifying the NetTAPE Utility Daemon Port Number

Specify a port number for the NetTAPE utility daemon (clutil) using **stsdmn.util.portno**. This daemon is internal to NetTAPE. You can use any port number except the one used by the status daemon. For example:

```
stsdmn.util.portno   9902        # port address for clutil daemon
```

Register the port number of the utility daemon in the **/etc/services** file for your network. This step is optional but recommended:

```
clutil port_num/tcp
```

Defining the User Access Control List

The user access list specifies the userids authorized to perform certain tasks associated with using NetTAPE.

stsdmn.operators	The userids authorized to perform operator functions using the NetTAPE GUI. If this keyword is omitted, all userids are authorized to perform all NetTAPE functions
stsdmn.operators.view	The userids authorized only to view the NetTAPE GUI. If this keyword is omitted, all users are authorized to view the NetTAPE GUI. However, it is not recommended that you give all users the authority to view the NetTAPE GUI because GUI performance would suffer.
stsdmn.operators.adm.	The userids authorized to perform administrative functions using the NetTAPE GUI.
stsdmn.blp	The userids authorized to use the bypass label processing (BLP) option. If this keyword is omitted, all userids are authorized to use the BLP option.

The levels of authority from lowest to highest are:

- stsdmn.operators.view
- stsdmn.operators
- stsdmn.operators.adm.

If a userid is listed at more than one level of authority, for instance **stsdmn.operators.view** and **stsdmn.operators**, the highest level of authority prevails (**stsdmn.operators** in this case).

A sample section of **nettape.adm.config** is shown below. Comments are preceded by a pound sign (#).

```
#
# User Access Control List
#                          User IDs
#                       -------------------
stsdmn.operators        oys ronglee elaw
stsdmn.operators.view   oddvar dag
stsdmn.operators.adm    oys
stsdmn.blp              oys ronglee
```

Specifying the Tape Libraries

Use **stsdmn.ibmacs** to identify IBM tape libraries and **stsdmn.stkacs** to identify STK tape libraries. To define a tape library to NetTAPE you must specify its tape library name and its library server node. A tape library's *library server node* is the node where its NetTAPE tape library daemon (cl3494d or clsilod) will run. Assuming you followed the configuration instructions in the **/usr/lpp/nettape_tlc/doc/library_config.README**, you have already chosen the tape library names and library server nodes you'll be using.

To define a tape library to NetTAPE, specify its library name and its NetTAPE library server node name (host) as follows.

For IBM tape libraries, you must also specify the library manager control path special files. If the tape library has no asynchronous port, specify its command port as its asynchronous port. For LAN-based control path information, see *IBM SCSI Tape Drive and Library Device Drivers*. For parallel or ESCON channel library manager control path information, see *IBM AIX Parallel and ESCON Channel Tape Attachment/6000*.

A sample section of **nettape.adm.config** is shown below. Comments are preceded by a pound sign (#).

```
#
# Tape Library Definitions
#
#               lib_name     host            ctrl_path
#              -------------------------------------------------
#                                        cmd_port    asynch_port
#                                      --------------------------
# IBM 3494
stsdmn.ibmacs   ibm3494_1    k80n06    /dev/lmcp0  /dev/lmcp0
stsdmn.ibmacs   ibm3494_2    k80n07    /dev/lmcp0  /dev/lmnp0
# STK Silo
stsdmn.stkacs   stksilo_1    k80n06
```

Specifying the Retry Interval for the Tape Library Daemon

Use **stsdmn.library.retry** to specify the interval (in minutes) between status daemon attempts to re-establish connection with the tape library daemon, when hardware failure has broken the connection. For instance, if you specify an interval of two minutes, the status daemon will attempt every two minutes to establish connection with the tape library daemon. For example:

```
stsdmn.library.retry  2
```

Handling Tape Library Tape Label Errors

When an output tape is mounted in a tape library, there is occasionally a mismatch between the tape label requested and the label found on the tape. You can use **stsdmn.library.volcheck** to specify how this problem is to be handled by NetTAPE. The options are:

Yes Inform the operator that intervention is required.

No Cancel the job instead of informing the operator that intervention is required. This is the default value.

Ignore Ignore the mismatch between tape label requested and tape label found and use the tape anyway.

For example:

```
stsdmn.library.volcheck  ignore
```

Defining the Devices and the Device Pools

In the **nettape.adm.config** file, the tape devices are defined, along with their pools, by specifying the following information for each device:

Host name The TCP/IP host name or High Performance Switch host ID to which the device is attached. The host name you specify determines the path NetTAPE uses to transfer data. For example, if you specify a High Performance Switch host ID or an FDDI host ID, NetTAPE will send the data across this interface.

Device pool name The device pool to which the device is assigned. The pool name should include the device type. Pool names can be up to 16 characters and are not case sensitive.

Device type The type of device. Must be one of the following:

- **3420** IBM 3420 tape drive or compatible
- **3422** IBM 3422 tape drive or compatible
- **3480** IBM 3480 tape drive or compatible
- **3490** IBM 3490 tape drive or compatible
- **3590** IBM 3590 tape drive or compatible
- **4mm** IBM 7206 Model 005 4mm tape drive or compatible
- **QIC** IBM 7207 Model 012 1/4 inch tape drive or compatible
- **8mm** IBM 7208 Model 011 8mm tape drive or compatible
- **D2** Ampex DST 310 tape drive
- **9TRK** IBM 9348 Model 012 9-track tape drive or compatible
- **OST** All others

See Chapter 3, “Supported Hardware and Software” on page 7 for a complete list of supported devices.

Device name The name of the device special file. Device special file names are not case sensitive.

Operation mode Indicates how the tape device is operated - manually or automatically. Specify one of the following:

Manual	Manual cartridge loading.
IBMACL	Automatic cartridge loader (ACL) with sequential volume access
IBMACF	The device is an IBM 3590 with an automatic cartridge facility (ACF) using random volume access mode. Note that you can also use the NetTAPE GUI to enable or disable ACF mode.
IBMACS	The device is an IBM 3494 or IBM 3495 tape library
STKACS	The device is an STK silo

Note

If you add a tape device that is to run in IBMACL mode, ensure that the operation mode switch on the tape device is set to automatic mode.

Options The options field is used to specify several different additional pieces of information.

Operator domain
The NetTAPE GUI lets you filter by operator domain the devices that are displayed. Operators see only information for devices they manage.

The format for specifying the operator domain is **od=***n*, where *n.* is an integer. The default operator domain is 1.

Device state
The state in which NetTAPE is to place the device: up, down, or reserved. The default device state is up. For tape libraries, the device state must be either down or reserved.

Tape library name
The name of the tape library to which the device belongs. The tape library name can be up to 16 characters and must be one of the names specified by the **stsdmn.ibmacs** or **stsdmn.stkacs** options.

STK tape library device address
A four number tuple representing the device address in the STK library (for example: *n1,n2,n3,n4*), where:

- *n1* Specifies the automated cartridge system (ACS) number
- *n2* Specifies the library storage module (LSM) number within the ACS
- *n3* Specifies the panel number within the LSM

n4 Specifies the drive number within the panel.

AVR
Automatic volume recognition. Allows tapes that are loaded into the tape device to be allocated automatically without operator intervention. AVR does not apply to tape libraries. Specify AVR if the device is to use automatic volume recognition. AVR can also be activated or deactivated using the NetTAPE GUI.

A sample section of **nettape.adm.config** is shown below. Comments are preceded by a pound sign (#).

```
#
# The following devices require manual tape mount operation
#
#hostname.device  pool_name  device_type  tape_name  op_mode  options
#-------------------------------------------------------------------
epacrs8.device      8mm        8mm       /dev/rmt0   manual
epacrs8.device      D2         d2        /dev/rmt6   manual
epacrs6.device      qIc1500    qic       /dev/rmt1   manual
epacrs6.device      qIc1500    qic       /dev/rmt0   manual
gb980.device        StK4280    3480      /dev/rmt7   manual  od=1,down
gb980.device        3480_1     3480      /dev/rmt3   manual
gb980.device        3480_1     3480      /dev/rmt4   manual
gb980.device        Stk4280    3480      /dev/rmt8   manual  od=2,down
gb980.device        StK4280    3480      /dev/rmt9   manual  od=1,down
bergen.device       STK4280    3480      /dev/rmt4   manual  OD=1,DOWN
v08n03.device       3490       3490      /dev/rmt1   manual  down
it2n01.device       4mm        4MM       /dev/rmt1   manual  od=1
it2n01.device       qic        QIC       /dev/rmt2   manual  od=2
it2n01.device       8mm        8MM       /dev/rmt3   manual  od=1
it2n01.device       9trk       9TRK      /dev/rmt5   manual  od=1
#
# The following devices have AVR mode ON
#
#hostname.device  pool    device  tape      operation  options
#                 name    type    name      mode
#-------------------------------------------------------------------
k80n05.device     3480_2   3480   /dev/386   manual    od=1,up,avr
k80n05.device     3480_2   3480   /dev/387   manual    od=1,up,avr

#
# The following 3590 devices have ACF function turned on.
#
#hostname.device  pool      device  tape      operation  options
#                 name      type    name      mode
#-------------------------------------------------------------------
#
k80n05.device     3590       3590   /dev/rmt0  ibmacf
epacrs8.device    3590       3590   /dev/rmt5  ibmAcf
spsw02.device     3590       3590   /dev/rmt1  ibmacf
#
# The following example shows both 3490 and 3590 tape devices attached to
# the same IBM 3494 library named ibm3494_1. In this case, each device
# type should have an unique device pool name assigned. For tape
# libraries, the device state must be either down or reserved.
#
#
#hostname.device  pool   device  tape      operation  options
#                 name   type    name      mode
#-------------------------------------------------------------------
k80n06.device    3490_2   3490   /dev/180  ibmacs    od=1,down,ibm3494_1
```

```
k80n06.device    3490_2   3490   /dev/181  ibmacs    od=1,down,ibm3494_1
k80n07.device    3590_2   3590   /dev/182  ibmacs    od=1,down,ibm3494_1
k80n07.device    3590_2   3590   /dev/183  ibmacs    od=1,down,ibm3494_1

#
# The following devices are attached to an STK Silo library
# Silo tape drives require additional device address information:
#
#
#
#hostname.device  pool   device  tape     operation  options
#                 name   type    name     mode
#-------------------------------------------------------------------
#                                          ACS,LSM,PANEL,DRIVE
#                                          ------------------
#                                                \       /
k80n03.device    3490_3  3490 /dev/rmt0   stkacs  0,0,1,0 od=1,down,stksilo_1
k80n03.device    3490_3  3490 /dev/rmt1   stkacs  0,0,1,2 od=1,down,stksilo_1
k80n03.device    3490_3  3490 /dev/rmt2   stkacs  0,0,2,0 od=1,down,stksilo_1
```

Specifying Shared Devices

Devices shared by multiple host systems are called **shared devices**. NetTAPE allows a device to be shared by up to eight hosts. Specify shared devices once for each host. To indicate that a device is shared, you must add a suffix to each *hostname.devicename* specification, following the format *hostname.devicename.suffix*, where *suffix* is number between 0 and 999.

For each specification of the shared device, use the same device suffix. For instance, here is how you would define a 3490 device shared by two hosts:

```
1st_host.this_device.1  3490ESCON 3490 /dev/518 ibmacl od=1,up,avr
2nd_host.this_device.1  3490ESCON 3490 /dev/518 ibmacl od=1,up,avr
```

A sample section of **nettape.adm.config** is shown below. Comments are preceded by a pound sign (#).

```
#
# The following is the example for sharing device between two nodes.
# Devices with the same suffix number are shared.
#
#hostname.device  pool      device  tape      operation  options
#                 name      type    name      mode
#-------------------------------------------------------------------
k80n06.device.1   3490ESCON  3490   /dev/518  ibmacl    od=1,up,avr
k80n06.device.2   3490ESCON  3490   /dev/519  ibmacl    od=1,up,avr
k80n03.device.1   3490ESCON  3490   /dev/518  ibmacl    od=1,up,avr
k80n03.device.2   3490ESCON  3490   /dev/519  ibmacl    od=1,up,avr
```

Defining the Esoteric Device Pools

Define your esoteric device pools and the device pools they include using **stsdmn.esoteric**. A sample section of **nettape.adm.config** is shown below. Comments are preceded by a pound sign (#).

```
#
# Esoteric Device Pool Definitions
#                 esot_dev_pool   dev_pools
#                ------------------------------------------------
stsdmn.esoteric      all3480     3480_1 stk4280
stsdmn.esoteric      all3490     3490 3490escon 3490_2 3490_3
```

Defining the Default Device Pool

If a mount request fails to specify a device pool, the request is directed to the default device pool. You can specify either a particular device pool as the default or you can specify an esoteric device pool. Use an esoteric device pool only if it makes sense for users to mount tapes on any of the devices comprising the esoteric device pool.

Define the default device pool using **stsdmn.devpool.default**. For example:

```
#
# Default Device Pool
# Note that the default device pool can be an esoteric device pool.
#                       dev_pool
#                      ----------
stsdmn.devpool.default  all3490
```

Specifying Default Scratch and Default Private Tape Categories

Note

STK uses the term *scratch pool* rather than scratch category. but the meaning is the same. Private categories do not apply to STK tape libraries.

The default scratch category for a tape library device pool is the ID of the category from which scratch tapes are to be taken when a mount request fails to specify a scratch tape source.

Define a default scratch category for each tape library device pool. The scratch category ID must be a hexadecimal value from X'1' to X'FEFF'.

The default private category for a tape library device pool specifies the ID of the category where private tapes are to be stored when a mount request fails to specify a target location. The private category ID must be a hexadecimal value from X'1' to X'FEFF'.

Notes:

1. All tape devices sharing a default scratch category or a default private category must have the same tape library controller.
2. If you are using NetTAPE with ADSM, the default scratch category will be used to mount scratch tapes for ADSM and the default private category will be used to store ADSM tapes.

A sample section of **nettape.adm.config** is shown below. Comments are preceded by a pound sign (#).

```
#
# Default Scratch/Private Category
#                          dev_pool  cat_id
#                         ------------------
stsdmn.devpool.cat.scratch  3490_2     FBC          #(1 to 0xFEFF)
stsdmn.devpool.cat.private  3490_2     F11          #(1 to 0xFEFF)
stsdmn.devpool.cat.scratch  3490_3     900          #(1 to 0xFEFF)
stsdmn.devpool.cat.private  3490_3     100          #(1 to 0xFEFF)
stsdmn.devpool.cat.scratch  3590_2     5D0          #(1 to 0xFEFF)
stsdmn.devpool.cat.private  3590_2     6D0          #(1 to 0xFEFF)
```

Controlling Mount Queue Processing

Mount queue processing is controlled by:

mount.queue

Specifies whether mount requests are to be queued when no device is available to satisfy the request.

YES	Queue mount requests that can't be satisfied
NO	Reject mount requests that can't be satisfied

mount.queue.scan.interval

The interval (in minutes) between NetTAPE scans for mount requests that have exceeded the maximum mount queue wait time specified by **mount.queue.max.wait**.

If you wish to have mount requests remain queued until they can be satisfied (no scan required then), omit this keyword. If you specify this keyword, also specify **mount.queue.max.wait**.

mount.queue.max.wait

The maximum time (in minutes) a mount request is to remain queued for a tape device. After a mount request has been queued for the specified time, the mount request is rejected.

If you wish to have mount requests remain queued until they can be satisfied, omit this keyword. If you specify this keyword, also specify **mount.queue.scan.interval**.

A sample section of **nettape.adm.config** is shown below. Comments are preceded by a pound sign (#).

```
#
# Mount Queue Values
#
mount.queue                yes  # queue request if device is busy
mount.queue.scan.interval  5    # interval in minutes for timeout
                                 # scanning
mount.queue.max.wait       30   # max tape client wait time in minutes
```

Specifying the AVR Daemon Scanning Interval

Specify the interval (in minutes) between automatic volume recognition scans using **avrdmn.interval**. For instance, if you specify an interval of five minutes, NetTAPE will perform an AVR scan every five minutes. For example:

```
#
# AVR Daemon Values
#
avrdmn.interval        5        # interval in minutes for timeout
#                                 scanning
```

Sample nettape.adm.config File

This sample **nettape.adm.config** file is located in **/usr/lpp/nettape/samples/config**.

```
#
# /etc/nettape.adm.config sample file
#
#
# NetTAPE Utility Daemon Values
#
stsdmn.util.portno   9902        # port address for clutil daemon
#
# User Access Control List
#                          User IDs
#                       -------------------
stsdmn.operators        oys ronglee elaw
stsdmn.operators.view   oddvar dag
stsdmn.operators.adm    oys
stsdmn.blp              oys ronglee

#
# Tape Library Definitions
#
#               lib_name     host            ctrl_path
#              ------------------------------------------------
#                                    cmd_port    asynch_port
#                                   -------------------------
# IBM 3494
stsdmn.ibmacs   ibm3494_1    k80n06    /dev/lmcp0  /dev/lmcp0
stsdmn.ibmacs   ibm3494_2    k80n07    /dev/lmcp0  /dev/lmnp0
# STK Silo
stsdmn.stkacs   stksilo_1    k80n06

# Specifies the time (in minutes) between status daemon attempts to
# communicate with the tape library manager for 3494 and STK tape
# libraries. If NetTAPE cannot communicate successfully with a tape
# library manager, it retries at the specified interval.

stsdmn.library.retry  2

#
# Option to enable tape library volcheck operator intervention
# notification. The valid options are "yes", "no", or "ignore".
#
stsdmn.library.volcheck  ignore


#
# Esoteric Device Pool Definitions
#                 esot_dev_pool   dev_pools
#                ------------------------------------------------
stsdmn.esoteric      all3480     3480_1 stk4280
stsdmn.esoteric      all3490     3490 3490escon 3490_2 3490_3

#
# Default Device Pool
# Note that the default device pool can be an esoteric device pool.
#                      dev_pool
```

```
#                       ----------
stsdmn.devpool.default  all3490

#
# Default Scratch/Private Category
#                          dev_pool  cat_id
#                         ------------------
stsdmn.devpool.cat.scratch  3490_2     FBC          #(1 to 0xFEFF)
stsdmn.devpool.cat.private  3490_2     F11          #(1 to 0xFEFF)
stsdmn.devpool.cat.scratch  3490_3     900          #(1 to 0xFEFF)
stsdmn.devpool.cat.private  3490_3     100          #(1 to 0xFEFF)
stsdmn.devpool.cat.scratch  3590_2     5D0          #(1 to 0xFEFF)
stsdmn.devpool.cat.private  3590_2     6D0          #(1 to 0xFEFF)

#
# Mount Queue Values
#
mount.queue                yes  # queue request if device is busy
mount.queue.scan.interval  5    # interval in minutes for timeout
                                # scanning
mount.queue.max.wait       30   # max tape client wait time in minutes

#
# AVR Daemon Values
#
avrdmn.interval        5        # interval in minutes for timeout
#                                 scanning

#
# Device Pool Definitions
#
# Note that the following are the valid verbs for operation mode and
# option values:
#
#    op_mode - manual (Manual tape mount operation)
#              ibmacl (Automatic cartridge loader with sequential access)
#              ibmacf (Automatic cartridge facility with random access)
#              ibmacs (IBM 3494/3495 tape library)
#              stkacs (STK Silo tape library)
#    options - od=i (operator domain) where 'i' is an integer
#              up   (device in up state)
#              down (device in down state)
#              resv (device in reserved state)
#              avr  (turns on the automatic volume recognition flag)
#
# The following devices require manual tape mount operation
#
#hostname.device  pool_name  device_type  tape_name  op_mode  options
#-------------------------------------------------------------------------
epacrs8.device      8mm        8mm       /dev/rmt0   manual
epacrs8.device      D2         d2        /dev/rmt6   manual
epacrs6.device      qIc1500    qic       /dev/rmt1   manual
epacrs6.device      qIc1500    qic       /dev/rmt0   manual
gb980.device        StK4280    3480      /dev/rmt7   manual  od=1,down
gb980.device        3480_1     3480      /dev/rmt3   manual
gb980.device        3480_1     3480      /dev/rmt4   manual
gb980.device        Stk4280    3480      /dev/rmt8   manual  od=2,down
gb980.device        StK4280    3480      /dev/rmt9   manual  od=1,down
```

```
bergen.device       STK4280    3480      /dev/rmt4   manual  OD=1,DOWN
v08n03.device       3490       3490      /dev/rmt1   manual  down
it2n01.device       4mm        4MM       /dev/rmt1   manual  od=1
it2n01.device       qic        QIC       /dev/rmt2   manual  od=2
it2n01.device       8mm        8MM       /dev/rmt3   manual  od=1
it2n01.device       9trk       9TRK      /dev/rmt5   manual  od=1
#
# The following devices have AVR mode ON
#                                                              options
#                                                             ----------
k80n05.device       3480_2     3480     /dev/386    manual  od=1,up,avr
k80n05.device       3480_2     3480     /dev/387    manual  od=1,up,avr

#
# The following is the example for sharing a device between two nodes.
# Devices that have the same suffix number (e.g. hostname.device.1) are
# in share mode. For example, k80n06 and k80n03 share /dev/518.
#
#     dev_option
#     ----------
k80n06.device.1    3490ESCON  3490     /dev/518    ibmacl  od=1,up,avr
k80n06.device.2    3490ESCON  3490     /dev/519    ibmacl  od=1,up,avr
k80n03.device.1    3490ESCON  3490     /dev/518    ibmacl  od=1,up,avr
k80n03.device.2    3490ESCON  3490     /dev/519    ibmacl  od=1,up,avr

#
# The following 3590 devices have ACF function turned on
#                                                  op_mode
#                                                  -------
k80n05.device      3590       3590     /dev/rmt0   ibmacf
epacrs8.device     3590       3590     /dev/rmt5   ibmAcf
spsw02.device      3590       3590     /dev/rmt1  ibmacf

#
# The following example shows both 3490 and 3590 tape devices attached to
# the same IBM 3494 library named ibm3494_1. In this case, each device
# type should have an unique device pool name assigned.
#                                                                    lib_name
#                                                                    --------
k80n06.device    3490_2      3490     /dev/180   ibmacs  od=1,down,ibm3494_1
k80n06.device    3490_2      3490     /dev/181   ibmacs  od=1,down,ibm3494_1
k80n07.device    3590_2      3590     /dev/182   ibmacs  od=1,down,ibm3494_1
k80n07.device    3590_2      3590     /dev/183   ibmacs  od=1,resv,ibm3494_1

#
# The following devices are attached to an STK Silo library
# Silo tape drive requires additional dev_addr information:
#
#                                        ACS,LSM,PANEL,DRIVE
#                                        -------------------
#                                              \       /
k80n03.device   3490_3  3490 /dev/rmt0   stkacs  0,0,1,0 od=1,down,stksilo_1
k80n03.device   3490_3  3490 /dev/rmt1   stkacs  0,0,1,2 od=1,down,stksilo_1
k80n03.device   3490_3  3490 /dev/rmt2   stkacs  0,0,2,0 od=1,down,stksilo_1
```

Making Changes to nettape.adm.config Using the NetTAPE GUI

You can use the NetTAPE GUI to modify the **nettape.adm.config** file. You can add devices to or delete devices from **nettape.adm.config** and you can change certain device attributes such as:

- Device state
- AVR status

The **nettape.adm.config** file defines the NetTAPE configuration at the start of each GUI session. Once the GUI is active, authorized users can make configuration changes either temporarily or permanently.

Temporary changes remain in effect only for the duration of the current status daemon session and leave **nettape.adm.config** unchanged. To make a permanent change, you must update the **nettape.adm.config** in any of the following ways:

- Editing the file directly while the status daemon is not active and then restarting the status daemon (this is the only way to define a new device pool)
- Using the GUI to make changes and to save them in **nettape.adm.config**
- Using the **cltopr** command with the **–U** option.

Step 4: Customizing Your .netrc File

The **.netrc** file is not NetTAPE-specific, but is used by other services such as **rexec**. NetTAPE uses **.netrc** for the same purpose as **rexec**, to provide user ID and authorization information.

A sample **.netrc** file is supplied with NetTAPE in **/usr/lpp/nettape/samples/config**. Copy this sample and modify it to match your environment.

Defining NetTAPE's /.netrc Files

Create a /**.netrc** file for the root user ID on each host in the NetTAPE configuration. The term, NetTAPE configuration, refers to any client, server, or physical device host that you are using with NetTAPE.

The /**.netrc** file must contain the machine name, root user ID, and root password for each host in the NetTAPE configuration. Ensure that only the root user ID has read and write access to this file.

Verifying Your .netrc Entries

Use the **rexec** command to verify that your **.netrc** file entries are valid by issuing the following command for each host in the NetTAPE configuration:

```
rexec host_name who
```

If the **.netrc** file entry for *host_name* is not valid, AIX prompts you for the userid to log on with as follows:

```
Name (host_name:userid):
```

host_name is the host you specified on the **rexec** command and *userid* is the userid from which you issued the **rexec** command.

Correct the entry for the specified host on your logon userid's **.netrc** file and try the **rexec** again.

Defining the System Administrator's .netrc File

If you are planning to start NetTAPE from a regular userid rather than from root, the **$HOME/.netrc** of that userid must contain a machine name, userid, and password, for each host in the NetTAPE configuration.

Follow the instructions in “Verifying Your .netrc Entries” to verify that your entries are correct.

Defining the Users' .netrc File

Each user must have a **$HOME/.netrc** file defined. For NetTAPE, it must contain a machine name, user ID, and password for each physical device host defined in **nettape.adm.config**. Ensure that only the file owner has read and write access to this file.

To use NetTAPE to access a tape device, a user must have access to the node containing the device. Define new userids as necessary.

Here are sample **.netrc** files for the users in the configuration shown in Figure 2 on page 23:

- For userid, `user1` on SP node **spn07** :

```
machine spsw02.pok.ibm.com login user1 password rong
machine rsfddi01.pok.ibm.com login user1 password tm2d2d
machine rs6k02.pok.ibm.com login user1 password tm2d2d
```

- For userid, `user2` on **rs6k02**:

```
machine rs6k01.pok.ibm.com login user2 password d1v5h
machine spn02.pok.ibm.com login user2 password d1v5h
```

- For userid, `user3` on **rs6k03**:

```
machine rs6k01.pok.ibm.com login user3 password d1v5h
machine rs6k02.pok.ibm.com login user3 password d1v5h
machine spn02.pok.ibm.com  login user3 password d1v5h
```

Chapter 9. Administering NetTAPE

The tasks required to configure and administer NetTAPE are listed in Table 2. The table also shows where each task is explained. Some of these tasks have already been discussed in the previous chapter because they are required for both for configuring and administering NetTAPE.

Table 2. Administration Tasks for NetTAPE

Task	**Where Explained**
Installing NetTAPE or NetTAPE Tape Library Connection	**/usr/lpp/nettape/README** **/usr/lpp/nettape_tlc/README**
Creating and customizing NetTAPE configuration files	21
Configuring the IBM and STK tape libraries	**/usr/lpp/nettape_tlc/doc/library_config.README**
Configuring NetTAPE to work with ADSM	9
Customizing the NetTAPE operator GUI	**/usr/lpp/nettape/doc/nettape_gui.README**
Understanding the NetTAPE daemons	44
Starting or restarting NetTAPE	46
Stopping NetTAPE	46
Starting the operator GUI	46
Adding or removing a tape device from the NetTAPE configuration	47
Understanding the NetTAPE device states	47
Resetting a tape device	48
Reserving a tape device	48
Sharing a NetTAPE tape device with MVS	49
Managing device pool mount queues	49
Troubleshooting	63

© Copyright IBM Corp. 1996

Understanding NetTAPE Daemons

This section describes the NetTAPE daemons and their different roles. References to some of these daemons appear throughout the book. You might also need this information to identify NetTAPE daemon processes running on your system.

A node where an NetTAPE user or application resides is referred to as a *client* node. A node where a device is attached is referred to as a *tape server* node. A *library server* is a node where a tape library daemon, cl3494d or clsilod, is running. However, if the library server is also the node to which the tape library is attached, then the library server is also a tape server node. Table 3 lists the NetTAPE daemons and describes their functions. The NetTAPE configuration in Figure 3 on page 45 shows where the different NetTAPE daemons might run.

Table 3. NetTAPE Daemons

Daemon name	Description	Started and stopped by:
nettaped	The status daemon, also known as the physical volume library (pvl) daemon. Starting this daemon brings up NetTAPE. A single instance of the status daemon controls the NetTAPE product and starts other daemons to handle various functions. The status daemon runs only on the host identified by **stsdmn.hostname** in **nettape.config**.	cltopr command
clsilod (NetTAPE TLC only)	The STK tape library daemon. Runs on the node where the STK Client System Component (CSC) Toolkit Storage Server Interface (SSI) daemon is installed. Works with the SSI daemon to process NetTAPE mount and unmount requests.	cltopr command
cl3494d (NetTAPE TLC only)	The IBM 3494/3495 Tape Library daemon. Runs on the node where the IBM 3494/3495 Library Manager Control Point (LMCP) interface is installed. Works with the Library Manager to process NetTAPE mount and unmount requests.	cltopr command
cltclntd	The tape client daemon. Each tape pseudo device is associated with a tape client daemon, which runs on the client node. Handles access to the physical tape device. If the device is remote, starts a tapesrv daemon on it.	By NetTAPE internally
tapesrv	The tape server daemon. Runs on the server node, handles functions related to remote tape access.	By NetTAPE internally
clutil	The utility daemon. Handles the creation and deletion of the tape pseudo device's special file, as well as other functions.	By NetTAPE internally
avrdmn	The automatic volume recognition (AVR) daemon. Runs on the server node, if AVR is enabled for that device in **nettape.adm.config** or using the NetTAPE operator GUI.	By NetTAPE internally.

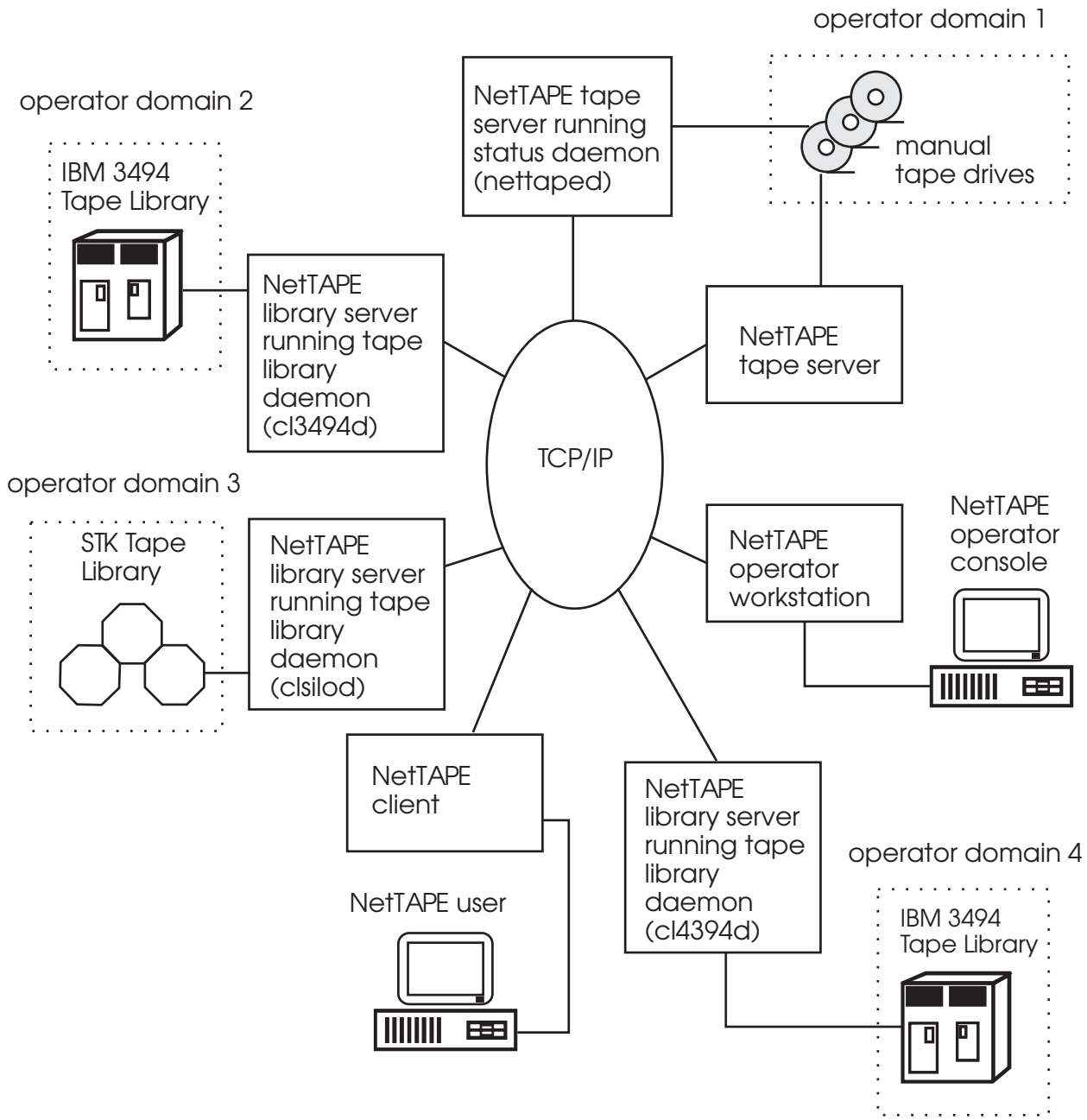

Figure 3. NetTAPE configuration showing locations of NetTAPE daemons

Starting or Restarting NetTAPE

The keyword **stsdmn.hostname** in **nettape.config** identifies the host where the status daemon is to run. Start the status daemon **only** on this host. For NetTAPE to work correctly, there must only be one instance of the status daemon running and it must run on the host you specify here.

The NetTAPE operator GUI should be active at all times. Otherwise, operator intervention messages will be lost.

To start NetTAPE, issue the following sequence of commands.

1. Start the status daemon using either of these commands:

   ```
   cltopr -S pvl (to start on local host)
   cltopr -S pvl -h host_name (to start on remote host)
   ```

2. Bring up the operator GUI:

   ```
   cltoprg
   ```

3. If you have IBM 3494 or 3495 Tape Libraries, start the IBM tape library daemon using either of these commands:

   ```
   cltopr -S 3494d -L library_name (to start on local host)
   cltopr -S 3494d -L library_name -h host_name (to start on remote host)
   ```

4. If you have STK Tape Libraries, start the STK tape library daemon using either of these commands:

   ```
   cltopr -S silod -L library_name (to start on local host)
   cltopr -S silod -L library_name -h host_name (to start on remote host)
   ```

For more information, see “cltopr—Issuing an NetTAPE operator command” on page 52 and “cltoprg—Starting the NetTAPE Operator Graphical User Interface” on page 60.

Stopping the NetTAPE Status Daemon

Before stopping NetTAPE, verify that no tape jobs are currently running, then issue the following which will stop all NetTAPE daemons and bring down the operator GUI:

```
cltopr -H pvl
```

For more information, see “cltopr—Issuing an NetTAPE operator command” on page 52.

Starting the NetTAPE GUI

To start the NetTAPE operator GUI, issue the **cltoprg** command.

You should keep at least one NetTAPE operator GUI running at all times. Otherwise, operator intervention messages might be lost. For more information, see “cltoprg—Starting the NetTAPE Operator Graphical User Interface” on page 60.

Adding or Deleting Devices from NetTAPE

You can use the NetTAPE GUI or the **cltopr** command to add devices to or delete devices from the NetTAPE configuration. Such a change can be either temporary or permanent, depending on whether you update **nettape.adm.config**.

Temporary changes remain in effect only for the life of the status daemon session and leave **nettape.adm.config** unchanged. To make a permanent change, you must update the **nettape.adm.config** either by:

- Editing the file directly while the status daemon is not active and then restarting the status daemon
- Using the GUI to make changes and to save them in **nettape.adm.config**
- Using the **cltopr** command with the –**U** option.

Note

If you are adding a tape device that runs in ACL mode, ensure that the switch on the tape device is set to automatic mode.

If you delete a device under the following circumstances, NetTAPE will fail due to an invalid esoteric pool when it is restarted:

- The device is the last one in a device pool
- The device pool that now contains no devices is part of an esoteric pool
- You update the /**etc/nettape.adm.config** file to make the change permanent.

"Defining the Devices and the Device Pools" on page 31 explains how to add a device directly to the **nettape.adm.config** file. The online help system for the NetTAPE GUI explains how to use the GUI to add or delete a device from the NetTAPE configuration. See "cltopr—Issuing an NetTAPE operator command" on page 52 for more information about using **cltopr** for this purpose.

Understanding NetTAPE Tape Device States

Each tape device under NetTAPE control can be in any of five different states:

Up	The device is available for allocation.
Down	The device is not available for allocation.
In use	The device is being used by a NetTAPE tape job.
Pending reserved	The state assigned to an in-use device that has been reserved. The device is marked as pending reserved until its current job completes. Then, the device is reserved.
Reserved	The device is not available for allocation by NetTAPE users.

Figure 4 on page 48 shows:

- How the different device states relate to each other
- The NetTAPE commands, APIs, and GUI functions that operate on each state.

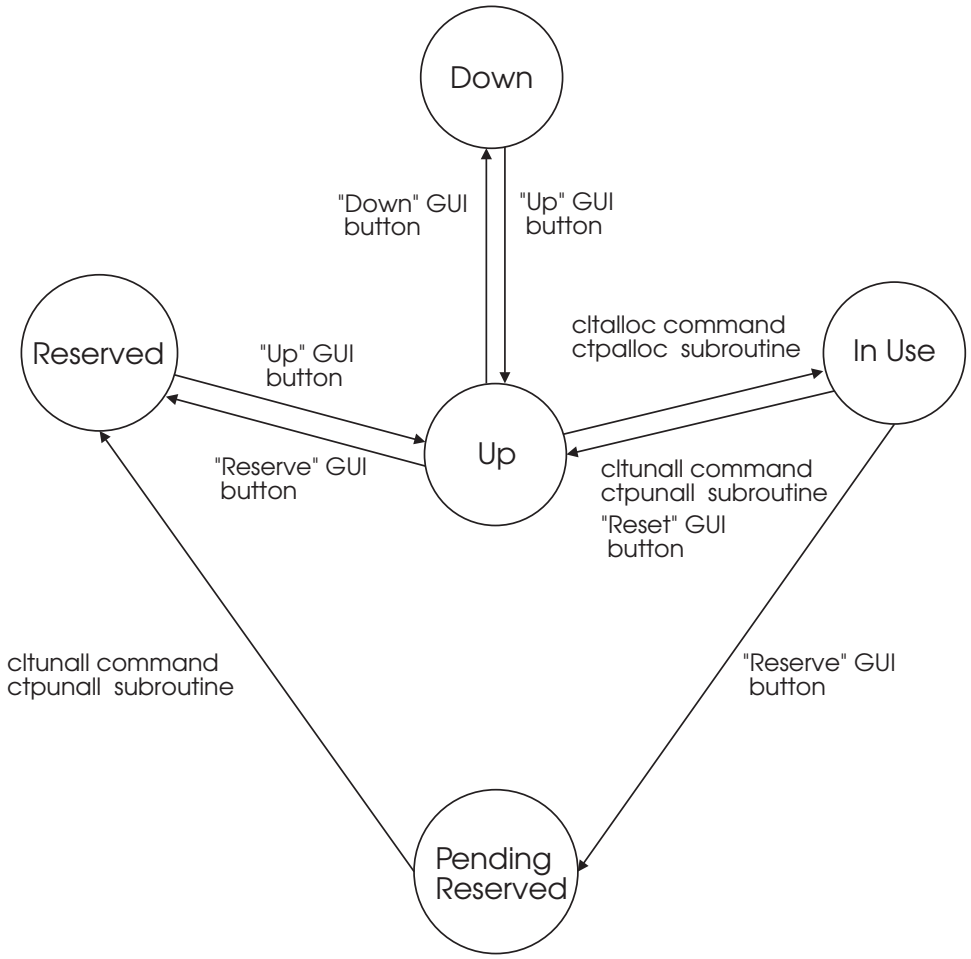

Figure 4. Tape device states and associated NetTAPE GUI buttons, commands, and subroutines.

Resetting a Tape Device

Resetting a tape device stops the job running on the device and returns the device to the available state. When the running job is stopped, the tape is rewound. In general, you reset a device to correct an error condition such as a hanging job or a hardware problem.

To reset a tape device, use the operator GUI. The online help system for the GUI explains how to use the GUI to reset a device. You can also use the **cltopr** for this purpose. See “cltopr—Issuing an NetTAPE operator command” on page 52 for more information.

Reserving a Tape Device

You can reserve a device using the operator GUI or the **cltopr** command. The online help system for the GUI explains how to use the GUI to reserve a device. You can also use the **cltopr** for this purpose. See “cltopr—Issuing an NetTAPE operator command” on page 52 for more information.

Reserving a device makes it unavailable for allocation. If the device is not in use, it goes directly into the reserved state.

When you reserve a device that is currently in use, NetTAPE marks the device as pending reserved. The device becomes reserved when either:

- The running job completes and the current user unallocates the device
- The job doesn't finish but reaches the end of the current tape.

To handle the unfinished job, NetTAPE:

1. Places the device in the reserved state
2. Sends a new mount request message to the operator to move the job to another device in the same device pool.

You can then assign the request to a new device. If the request is queued, you can resume the job by moving the mount request to the top of the mount queue using the GUI's mount queue management window. See “Managing Device Pool Mount Queues” for more information.

Sharing a NetTAPE Tape Device with an MVS System

NetTAPE and MVS can share twin-tailed tape devices but you must assign the tape device to each manually. To assign to MVS a tape device currently assigned to NetTAPE:

- Place the tape device in the down state using either the NetTAPE operator GUI or the **cltopr** command.
- Vary the tape device online to MVS.

To assign to NetTAPE a tape device that is currently assigned to MVS:

- Vary the tape device offline to MVS.
- Place the tape device in the up state using either the NetTAPE operator GUI or the **cltopr** command.

Managing Device Pool Mount Queues

Each device pool and esoteric device pool has its own mount queue. Jobs, which NetTAPE queues in FIFO order, are placed on the mount queue for the device pool or esoteric device pool specified (or taken as the default) on the allocation request.

The NetTAPE GUI's mount queue management window lets you view each device pool mount queue and reorder or delete queued jobs. Esoteric device pool mount queues cannot be viewed or changed.

See the NetTAPE operator GUI's online help system for more information about the mount queue management window.

Chapter 10. Administrative Commands

Table 4 lists the NetTAPE administrative commands and where they are described.

Table 4. NetTAPE Administrative Commands

Command	Description	Where Explained
cltopr	Issue a NetTAPE operator command	52
cltoprg	Bring up the NetTAPE operator GUI	60
cltterm	Stop the NetTAPE tape client daemon	62

Note:

You cannot issue NetTAPE commands from an effective user ID, meaning one assumed using the **su** command to login as another user ID.

© Copyright IBM Corp. 1996

cltopr—Issuing an NetTAPE operator command

Syntax

cltopr [–**a** *action*]
[–**c** *device_control_option*]
[–**D** *device* | *device*@*host*]
[–**f** *force_action*]
[–**h** *hostname*]
[–**H** *daemon_type* [*library_name*]]
[–**l** *daemon_log_name*]
[–**L** *library_name*]
[–**m** [*messagenum* | **all**]]
[–**o** *options*]
[–**P** *poolname*]
[–**q**]
[–**r** *messagenum*]
[–**s** [**on** | **off**]]
[–**S** *daemon_type* [*library_name*]]
[–**t** *device_type*]
[–**U**]
[–**v** *volser*]
[–**?**]

Parameters

The **cltopr** command has parameters for:

- Device specification
- Device and message control
- Daemon operation
- Command syntax

Device Specification Parameters

–**D** *device* | *device*@*hostname*

Specifies the name of the tape device, for example, /**dev**/**rmt0**. The device name is converted to lower case. If you use –**D** *device*@*hostname*, you may not use –**h**.

–**h** *hostname*

Specifies the name of the host to which the device is physically attached or the host where a daemon is to be started or stopped. If you do not specify *hostname* and do not specify a host using –**D** *device*@*hostname*, the local host is taken as the default. If you use –**D** *device*@*hostname*, you may not use –**h**.

–**o** "*options*"

Specifies device-specific options to use when adding a device with –**c add**. The options string must be enclosed in double quotes and can include any of the following:

mode=*mode*

Specifies the operation mode for the tape device. *mode* must be one of the following:

IBMACF Automatic cartridge facility supporting random volume access

IBMACL Automatic cartridge loader with sequential volume access

IBMACS IBM 3494 or 3495 tape library

MANUAL Manual cartridge loading mode.

STKACS STK tape library

addr=*address*
A four number tuple representing the device address in the STK library (for example: *n1,n2,n3,n4*), where:

n1 Specifies the automated cartridge system (ACS) number
n2 Specifies the library storage module (LSM) number within the ACS
n3 Specifies the panel number within the LSM
n4 Specifies the drive number within the panel.

od=*operator_domain*
Specifies the operator domain of the device

lib=*tape_library*
Specifies the name of a tape library. Can be up to 16 characters.

op=*other_options*
Specifies additional options relating to the tape device, each separated by a comma. You can specify any of the following:

up The device state is up. This is the default for all except tape library devices.

down The device state is down.

This option causes the device to remain down after it is added. Tape library devices must be added in the down state. For tape library devices, this is the default.

avr The device is to be enabled for AVR

Examples of options strings:

```
-o "mode=STKACS addr=0,1,2,3 lib=stksilo_1 op=down"
-o "mode=MANUAL op=up,avr od=123"
```

-**P** *poolname*
Specifies the name of a device pool. The pool name is converted to upper case. Device pools are defined in **nettape.adm.config**. If you omit -**P**, the default pool defined in **nettape.adm.config** is used. The following cannot be specified:

- Esoteric device pools
- Device pools not already defined in **nettape.adm.config**. The system administrator must add new device pools manually to **nettape.adm.config**.

-**t** *device_type*
Specifies the device type of the device to be added. Used with the with the -**c add** option. *device_type* can be one of:

3420 IBM 3420 tape drive or compatible

3422 IBM 3422 tape drive or compatible

3480 IBM 3480 tape drive or compatible

3490 IBM 3490 tape drive or compatible

3590 IBM 3590 tape drive or compatible

4mm IBM 7206 Model 005 4mm tape drive or compatible

QIC IBM 7207 Model 012 1/4 inch tape drive or compatible

8mm IBM 7208 Model 011 8mm tape drive or compatible

D2 Ampex DST 310 tape drive

9TRK IBM 9348 Model 012 9-track tape drive or compatible

OST All others

See Chapter 3, “Supported Hardware and Software” on page 7 for a complete list of supported devices.

–**v** *volser* Specifies a scratch volser.

Device and Message Control Parameters

–**a** *action* Specifies the operator's action in response to an operator message. Specify –**a** with –**r**. Valid *action*s are:

cancel Specifies that the mount request should be discarded.

move Specifies that the mount request is to be moved to a different device than the one requested in the message. This change is invisible to the user requesting the device. If you are moving a scratch mount, you must also specify the volser using –**v** option.

mount Specifies that a mount request is to be satisfied. Either a device is allocated as requested or the mount request is queued to wait for an available device. If you are mounting a scratch tape, you must also specify the volser using –**v** option.

NetTAPE displays one of the following messages on the tape drive display where the volume is to be mounted:

- `M` *`external_volser`*, if the mount request is for a specific tape
- `M SCR SL`, for a standard label scratch tape mount request
- `M SCR AL`, for an ANSI label scratch tape mount request
- `M SCR NL`, for an unlabeled scratch tape mount request.

When a scratch tape is mounted, NetTAPE updates the tape drive display to show the external volser of the tape.

When the tape is unmounted, NetTAPE displays the following message on the tape drive display: `K` *`external_volser`*.

–**c** *device_control_option*
Specifies a device control option. Valid *device_control_option*s are:

add Adds device to the configuration. With the **add** option, you must specify the device name (–**D**), device type (–**t**), host (–**h**), and device pool (–**p**).

delete Deletes device from configuration. With the **delete** option, you must specify the device name (–**D**) and host (–**h**).

Note: If you delete all devices in a device pool from **nettape.adm.config**, and that device pool is also part of an esoteric pool, NetTAPE will fail due to an invalid esoteric pool you restart it.

down Bring the device down. To bring a device down, AVR must be deactivated if applicable.

reserve Put the device in the reserved state. To reserve a device, AVR must be deactivated if applicable.

The reserved state prevents the device from being assigned to a user. The reserved device can be used by the operator.

If the device is not in use, it goes immediately into the reserved state. If the device is in use, the device is put into the reserved state at the next End Of Tape or when the user invokes **cltunall** or **ctpunall**.

When the device reaches End Of Tape, NetTAPE will allocate another similar tape device and mount the next new volume on it and then resume the user's tape I/O operation.

reset Change the state of a device from in-use to up. Resetting a device forces the cancellation of the job running on it.

To reset a device, AVR must be deactivated if applicable.

up Bring a device up. A device in the up state is available for allocation.

To bring up a device, AVR must be deactivated if applicable.

For more information about device states, see Figure 4 on page 48.

–**f** Force an action. Use –**f** to avoid the prompt for confirmation that NetTAPE issues when you specify **cltopr** to perform certain actions such as deleting a device or cancelling a mount request.

–**m [***messagenum* | **all]**
Displays messages for pending mount requests. If you specify *messagenum*, that message is displayed. If you specify **all**, all pending mount request messages are displayed.

–**q** Displays device information. If a device was specified with –**D** *device*, information for that device is displayed. Otherwise, information for all devices is displayed.

Note:

Device information includes the name of the device pool to which the device belongs. The device might also belong to one or more esoteric device pools but these are not shown.

–**L** *library_name*
Specifies the name of a 3494 or STK tape library that is defined in **nettape.adm.config**. –**L** is required with the –**S** and –**H** options.

–**r** *messagenum*
Indicates that you are responding to a message. Specify the number of the message to which you are replying with the *messagenum* parameter and use –**a** *action* to specify the action in response to the message.

–**s [on | off]**
Specifies that a scan of the automatic cartridge facility (ACF) magazine is to be performed.

Daemon Operation Parameters

–**H** *daemon_type*
Halts a NetTAPE daemon. *daemon_type* can be one of:

pvl Physical Volume Library Daemon (nettaped, the status daemon).

3494d 3494 Tape Library Daemon (cl3494d)

silod STK Tape Library Daemon (clsilod)

The –**L** parameter must be specified if you specify **3494d** or **silod**.

See “Understanding NetTAPE Daemons” on page 44 for more information about the NetTAPE daemons.

–**l** *daemon_log_name*
Specifies the name of the file where daemon error messages are to be logged on the node where the daemon runs.

You can optionally specify –**l** with –**S**. If you omit the –**l** option, status daemon (nettaped) error messages are saved in /**tmp**/*daemon_type***.log.** IBM 3494/3495 Tape Library daemon and STK Tape Library daemon error messages are saved in /**tmp**/*daemon_type_library_name***.log.**

Note

IBM recommends that you specify the –**l** option to prevent the possibility of filling up your /**tmp** directory.

–**S** *daemon_type*
Starts a NetTAPE daemon. *daemon_type* can be one of:

pvl Physical Volume Library daemon (the status daemon).

3494d 3494 Tape Library daemon

silod STK Tape Library daemon

The –**L** parameter must be specified if you specify **3494d** or **silod**.

See “Understanding NetTAPE Daemons” on page 44 for more information about the NetTAPE daemons.

Starting the Status Daemon

You must start the status daemon (pvl) on the host specified in **nettape.config** with the **ststdmn.hostname** keyword, which indicates where the status status daemon is to run.

If you specify the –**h** option, the host name must be what is specified in **nettape.config**. If you omit the –**h** option, you must be starting the status daemon from the host specified in **nettape.config**.

To verify that the status daemon has started successfully:

- If you specified the –**h** option, issue `rsh host_name "ps -ef | grep nettaped"`
- If you omitted the –**h** option, issue `ps -ef | grep nettaped`

–**U** Updates the **nettape.adm.config** file. This parameter changes the **/etc/nettape.adm.config** file by updating the current file with the parameters specified on the **cltopr** command. Any daemons currently running are unchanged. To pick up the configuration changes, you need to restart the status daemon. See “Starting or Restarting NetTAPE” on page 46 for more information.

Command Syntax Parameters

–**?** Displays the command syntax.

Description

The **cltopr** command lets you perform certain operator functions. Normally, the recommended method for performing operator functions is through the NetTAPE operator GUI. **cltopr** should be used only when the NetTAPE operator GUI is not accessible.

You must have **stsdmn.operators** authority or higher to issue the **cltopr** command with all options **except** –**q**.

Authority is set in the user access list section of **nettape.adm.config** file. See “Defining the User Access Control List” on page 29 for more information.

You can use **cltopr** to do any of the following:

- Display outstanding operator messages
- Reply to an operator message
- Query the status of a tape device
- Initiate an ACF scan
- Add or delete a device
- Change the state of a device
- Start or halt a NetTAPE daemon.

Messages and Responses

See “NetTAPE Tape Interface Return Values and Messages” on page 125 for information about messages.

Examples

1. To start the PVL (status) daemon on host gecko, issue:

   ```
   cltopr -h gecko -S pvl
   ```

2. To start the 3494 Tape Library daemon on host **gecko** for the 3494 tape library defined in **nettape.adm.config** as **ibm3494_1**, issue:

   ```
   cltopr -h gecko -S 3494d -L ibm3494_1
   ```

3. To halt the PVL daemon on host **gecko**, issue:

   ```
   cltopr -h gecko -H pvl
   ```

4. To halt the Silo Tape Library daemon on host **gecko** for the STK silo tape library defined in **nettape.adm.config** as **stksilo_1**, issue:

   ```
   cltopr -h gecko -H silod -L stksilo_1
   ```

5. To update **nettape.adm.config** with changes made by the **cltopr** command, issue:

   ```
   cltopr -U
   ```

6. To start an Automatic Cartridge Facility (ACF) scan of device /**dev**/**rmt1** on host bonaire.kgn.ibm.com, issue:

   ```
   cltopr -h bonaire.kgn.ibm.com -D /dev/rmt1 -s on
   ```

7. To halt an ACF scan of device /**dev**/**rmt0** on host **opus40**, issue:

   ```
   cltopr -h opus40 -D /dev/rmt0 -s off
   ```

8. To change the state of device /**dev**/**rmt0** on host **opus40** to UP, issue:

   ```
   cltopr -D /dev/rmt0@opus40 -c up
   ```

   You can also use this equivalent command:

   ```
   cltopr -D /dev/rmt0 -h opus40 -c up
   ```

9. To change the state of device /**dev**/**rmt0** on host **opus40** to DOWN, issue:

   ```
   cltopr -D /dev/rmt0@opus40 -c down
   ```

10. To change the state of device /**dev**/**rmt0** on host **opus40** to RESERVE, issue:

    ```
    cltopr -h opus40 -D /dev/rmt0 -c reserve
    ```

11. To add device /**dev**/**rmt0** on host **opus40** to the device pool **scratch**, issue:

    ```
    cltopr -D /dev/rmt0 -h opus40 -P scratch -o "down" -c add
    ```

12. To delete device /**dev**/**rmt0** on host **opus40** from the device pool **3480pool**, issue:

    ```
    cltopr -D /dev/rmt0 -h opus40 -P 3480pool -c delete
    ```

13. To display all currently outstanding operator messages, issue:

    ```
    cltopr -m all
    ```

14. To display outstanding operator message number 15, issue:

    ```
    cltopr -m 15
    ```

15. To display current device allocation status, issue:

```
cltopr -q
```

16. To display the current status of device /**dev**/**rmt1** on host **bonaire**, issue:

    ```
    cltopr -q -h bonaire -D /dev/rmt1
    ```

17. To respond to message number 15 by issuing a mount, issue:

    ```
    cltopr -r 15 -a mount
    ```

    This example assumes that the mount message had already specified the volser for the tape.

18. To mount a scratch tape with the volser **scr001** in response to message 15, issue:

    ```
    cltopr -v scr001 -r 15 -a mount
    ```

    This example assumes that the mount message did not specify a volser for the tape, so it had to be specified on the **cltopr** command.

19. To cancel message number 15 and ask for confirmation, issue:

    ```
    cltopr -r 15 -a cancel
    ```

20. To move a mount request specified by message 15 to the device /**dev**/**rmt6** on host **gecko**, issue:

    ```
    cltopr -h gecko -D /dev/rmt6 -r 15 -a move
    ```

Files

$HOME/.netrc	The **.netrc** file with password information.
/**etc**/**nettape.adm.config**	The NetTAPE configuration file, **nettape.adm.config**.

Related Topics

Commands: **cltoprg**

cltoprg—Starting the NetTAPE Operator Graphical User Interface

Syntax

cltoprg [–**display** *hostname:session_number*]
[–**l** *log_file_path*]
[*operator_domain*]
[–**w**]

Parameters

–**display** *hostname:session_number*

Specifies the X-Windows session in which the GUI screen is to appear.

–**l** *log_file_path*

Specifies where NetTAPE is to log messages and operator actions. Each logged message or action is time stamped.

The following messages are logged:

Mount messages Displayed in the GUI's mount message area

Unmount messages Displayed in the GUI's mount message area)

Operator intervention messages Displayed in the GUI's operator intervention pop-up window

Informational messages Displayed in the GUI's general message area.

Operator actions

- Processing a mount request
- Cancelling a mount request
- Moving a mount request to a different device.

operator_domain

Specifies the operator domain of the devices to be displayed. For instance, if you specify 1, the NetTAPE operator GUI will display all devices assigned to operator domain 1.

If you omit this keyword, all devices are displayed.

–**w**

Requests the maximum width for the GUI screen to display host names and device names of up to 16 characters without truncation.

If you omit this keyword, the GUI screen truncates host names and device names greater than 12 characters.

Description

The **cltoprg** command brings up the NetTAPE operator GUI.

Before issuing this command, you must set the following environment variables or have them set in your **.profile** file:

```
Korn Shell:
  export LIBPATH=/usr/lpp/clnettape/lib:${LIBPATH}
/* Type the next command all on one line, without the backslashes (\) */
  export DTHELPUSERSEARCHPATH=/usr/lpp/nettape/help/%H:\
                              /usr/lpp/nettape/help/%H.hv:\
                              /usr/lpp/nettape/help/%H.sdl

C Shell:
  setenv LIBPATH /usr/lpp/clnettape/lib:${LIBPATH}
/* Type the next command all on one line, without the backslashes (\) */
  setenv DTHELPUSERSEARCHPATH /usr/lpp/nettape/help/%H:\
                              /usr/lpp/nettape/help/%H.hv:\
                              /usr/lpp/nettape/help/%H.sdl
```

Messages and Responses

See “NetTAPE Tape Interface Return Values and Messages” on page 125 for information about messages.

Examples

1. Bring up the operator GUI in X-Windows session 0, with all devices displayed.

   ```
   cltoprg -display myhost:0
   ```

2. Bring up the operator GUI at maximum width with all devices assigned to operator domain 2. Log messages and operator actions to **my_log_file**.

   ```
   cltoprg -l /mydir/my_log_file -w 2
   ```

Files

$HOME/.netrc	The **.netrc** file with password information.
/etc/nettape.adm.config	The NetTAPE configuration file, **nettape.adm.config**.

Related Topics

Commands: **cltopr**

cltterm—Stopping the NetTAPE Tape Client Daemon

Syntax

cltterm –**f** *device*

Parameters

–**f** *device* Specifies the tape device associated with this daemon's instantiation (for example, /**dev**/**pst0**).

Description

This command signals the pseudo device to terminate the local tape client, the **cltclntd** daemon.

Security Restrictions

You must have **root** authority to use this command.

Messages and Responses

This command displays one of the following messages upon completion:

- `cltterm: daemon on /dev/pst`*n*` is now terminated`
- `cltterm: Error - can only be run by root`
- `cltterm: Usage: cltterm -f device`

Chapter 11. Troubleshooting Tips for the Administrator

Finding NetTAPE Error Logs

NetTAPE logs informational and error messages in a variety of logs to help you monitor NetTAPE activities and diagnose possible errors.

The Status Daemon and Tape Library Daemons

Status daemon (nettaped), IBM 3494/3495 Tape Library daemon (cl3494d), and STK Tape Library daemon (clsilod) error messages are saved in log files on the nodes where the daemons run:

- Status daemon errors are saved by default in **/tmp/nettaped.log.**.
- IBM 3494/3495 Tape Library daemon error messages are saved by default in **/tmp/cl3494d_library_name**.log.
- STK Tape Library daemon error messages are saved by default in **/tmp/clsilod_library_name**.log.

The **–l** option on the **cltopr** command lets you specify different log file paths for saving the daemon log files. It is recommended that you specify the **–l** option to prevent the possibility of filling up your **/tmp** directory.

Tape Client Daemon

The tape client daemon (cltclntd) records information about its activities by:

- Writing to a daemon log file, one file per daemon
- Using AIX error logging services.

The tape client daemon writes informational and error messages into the log file **/tmp/cltclntd.pst***n*, where *n* is the number, assigned by NetTAPE, of its associated device special file.

For example, the tape client daemon associated with tape pseudo device **/dev/pst1** records activities in the log file **/tmp/cltclntd.pst1**. When the daemon stops, the log remains on the system; when the daemon is restarted, the new log replaces the old one.

GUI Message Log

This log, saved in the directory specified using the **–l** option on the **cltoprg** command, provides a time-stamped record of the following:

Mount messages	Displayed in the GUI's mount message area
Unmount messages	Displayed in the GUI's mount message area)
Operator intervention messages	Displayed in the GUI's operator intervention pop-up window
Informational messages	Displayed in the GUI's general message area.

© Copyright IBM Corp. 1996

Operator actions

- Processing a mount request
- Cancelling a mount request
- Moving a mount request to a different device.

See “cltoprg—Starting the NetTAPE Operator Graphical User Interface” on page 60 for more information.

System Error Log

The tape client daemon puts records into the system error log using the AIX error logging facility. Read the system error log using the **errpt** command with the –**a** option. This log contains information about all NetTAPE tape client daemons and is unaffected by stopping or restarting a daemon.

Failure to Deallocate Tape Devices

Under normal circumstances, NetTAPE starts and stops the NetTAPE tape client daemon as needed. If NetTAPE terminates abnormally, however, some tape devices might remain allocated even though they are no longer in use. In this case, you will need to manually stop the tape client daemons associated with the still-allocated devices as follows:

1. Find any tape client daemons that are still running:

   ```
   ps -ef | grep cltclntd
   ```

2. Stop the tape client daemons by issuing the following for each:

   ```
   cltterm -f /dev/pstn
   ```

   For more information about the **cltterm** command, see “cltterm—Stopping the NetTAPE Tape Client Daemon” on page 62.

   For more information about NetTAPE daemons, see “Understanding NetTAPE Daemons” on page 44.

Failure Restarting NetTAPE

NetTAPE will fail on restart if it detects an esoteric device pool that includes a device pool having no devices. This situation can occur if the last device in a device pool is deleted from **/etc/nettape.adm.config** but the empty device pool is still part of an esoteric pool. To correct the problem, delete the device pool from the esoteric pool in **/etc/nettape.adm.config**.

Setting NetTAPE Environment Variables for Debugging

When NetTAPE starts, it checks the values of the NetTAPE environment variables. Under normal circumstances, you should leave these variables set to the defaults assigned by NetTAPE. Information about changing the values of NetTAPE environment variables is included here for debugging purposes only. If you call IBM support to report a NetTAPE problem, you might be asked to set some of these variables to capture diagnostic information.

To set the NetTAPE environment variables, issue the **setenv** (C shell) or **export** (Korn shell) commands before you start the NetTAPE daemons. For example, a C shell user who wants to see all NetTAPE debug messages issues:

```
setenv CLIODEB –1
```

A Korn shell user who wants to see only messages relating to starting and stopping clients issues:

```
export CLIODEB –1
```

NetTAPE uses the following environment variables:

CLIOBIN Sets the private directories for AIX search path when a process is being started. The default value is **$HOME/bin**. The total path used when starting a new process is PATH = $CLIOBIN:$CLIOSYS:$CLIOPATH. The path statement is a colon-delimited list of directories.

CLIODEB Sets debug flags.

NetTAPE generates many messages as it performs its functions. If CLIODEB is set to one of the following values, the messages are printed to the user's terminal. These messages are provided “as-is”, with no other explanation, but they can prove very helpful in establishing the NetTAPE environment and developing NetTAPE applications.

The default value of CLIODEB is 0, which requests that no messages be displayed. You set the CLIODEB environment variable to indicate the level of messages you want to receive. You can set CLIODEB using either hexadecimal or decimal notation. For example, `CLIODEB=0x2000` is equivalent to `CLIODEB=8192`. Table 5 lists the debug flags and their meanings.

You can select multiple messages by adding values together. For example, to receive messages about stopping and starting clients (0x01). and about events related to the **parconf** file (0x20), set CLIODEB to the value 0x21.

Table 5 (Page 1 of 2). Flags for the CLIODEB Environment Variable

Decimal	Hex	Messages Displayed
–1	0xFFFF	Displays all messages
0	0x00	No status info printed
1	0x01	Starting/stopping clients
2	0x02	SCHEDULE/SYNCHRO/WAITREQ and ALERT/WAITFOR
4	0x04	Connect/disconnect
8	0x08	MSANY/SMANY and SPANY/RPANY
16	0x10	Actual data transfer and SETSRV calls
32	0x20	Parconf file
64	0x40	Reserved
128	0x80	Reserved

Table 5 (Page 2 of 2). Flags for the CLIODEB Environment Variable		
Decimal	**Hex**	**Messages Displayed**
256	0x0100	Tape allocation, unallocation, open and close
512	0x0200	Tape read and write
1024	0x0400	Tape write EOF, rewind, skip file, skip record, and write to operator
2048	0x0800	Internal. For use by IBM support.

CLIONODE Specifies the local host name when you don't want to use the host name returned by the **gethostname()** call.

If your installation has installed more than one instance of TCP/IP on a host, each TCP/IP instance is associated with a specific local host name. You should set CLIONODE to the local host name associated with the instance of TCP/IP you want to use.

CLIOPATH Sets the other directories for AIX search path when a process is being started. The default value is the list of directories specified in the AIX environment variable **$PATH**. The total path used when starting a new process is PATH = $CLIOBIN:$CLIOSYS:$CLIOPATH.

CLIOSYS Sets the installation directories for AIX search path when a process is being started. The default value is **/usr/local/CLIO;/usr/bin**. The total path used when starting a new process is PATH = $CLIOBIN:$CLIOSYS:$CLIOPATH.

CLIOTMO Sets the time-out value in seconds. The default value of CLIOTMO is 20 seconds.

DBG Causes debugging information to be written to the daemon error logs listed in “The Status Daemon and Tape Library Daemons” on page 63.

Part 3. Using NetTAPE

Chapter 12. Introduction to Using NetTAPE 69

Chapter 13. Troubleshooting Tips for Users 77

Chapter 14. Commands 79

Chapter 15. Application Programming Interfaces 103

© Copyright IBM Corp. 1996

Chapter 12. Introduction to Using NetTAPE

Note

Use CLIO/S commands and APIs only for accessing MVS tape devices. Use NetTAPE commands and APIs for all AIX-only processing.

The tasks you need to perform to use NetTAPE are listed in Table 6. The table also shows where each task is explained.

Table 6. Tasks Associated with Using NetTAPE

Task	Where Explained
Customizing your .netrc file. You'll need to do this before you can use NetTAPE.	41
Allocating and using tapes	69
Understanding MVS tape formats	72
Compiling, linking, and running with the NetTAPE API	103
Understanding tape positioning	75
Understanding End of Tape handling	76
Obtaining volume information using the VFILE option	71
Finding NetTAPE API usage examples	103
Determining the available device pools for your allocation request	70
Troubleshooting errors	77

Allocating and Using Tapes

With NetTAPE, you can read tapes created on either AIX or MVS and write tapes to be read on either AIX or MVS.

To read a tape created on MVS or write a tape to be read on MVS, NetTAPE provides allocation parameters equivalent to those found on MVS. See "Understanding MVS Tape Formats" on page 72 for more information about MVS tape formats.

Using NetTAPE Commands

In general, you perform the following steps to read or write a tape using NetTAPE commands:

1. Allocate the tape device using the **cltalloc** command, p.81.
2. Use standard AIX commands to access the tape device.
3. Optionally re-access the same tape file with different parameters or access a different file on the same volume using the **cltopen** command, p.93. Once you have done this, repeat steps 2 through 3 as many times as needed. Then proceed to step 4 to finish.
4. Unallocate the tape device using the **cltunall** command, p.99.

© Copyright IBM Corp. 1996

Appendix A, “NetTAPE Commands Usage Examples” on page 129 provides examples of using NetTAPE commands to perform different tape operations.

Using the NetTAPE API

In general, you perform the following steps to read or write a tape using NetTAPE subroutines:

1. Allocate the tape device using the **ctpalloc** subroutine, p.104
2. Open the tape file using **ctpopen** p.111.
3. Read from or write to the tape file using **ctpread**, p.117 , or **ctpwrite**, p.124.
4. Close the tape file using **ctpclose**, p.110.
5. Optionally re-access the same tape file with different parameters or access a different file on the same volume using the **ctpopen** command. Once you have done this, repeat steps 3 through 5 as many times as needed. Then continue with step 6 to finish.
6. Close the tape file using **ctpclose**.
7. Unallocate the tape device using **ctpunalloc**, p.121.

Appendix B, “NetTAPE API Usage Examples” on page 133 provides examples of using the NetTAPE API to perform different tape operations.

Determining the Available Device Pools for Your Allocation Request

Before you submit an allocation request using **cltalloc** or **ctpalloc** you need to see which device pools are available. You can get this information by using the **cltopr** command with the –**q** option.

The output of this command is a status line for each device defined to NetTAPE. The pool name associated with the device is the first item of information on the line. The device might also belong to one or more esoteric device pools but these are not shown. To find out the names of the esoteric device pools, contact your system administrator.

Here is an example of the output from **cltopr –q**:

```
Current status for all known devices...
Pool_name         Host_name         Device_name       Dev_type  State  Op_mode
================================================================================
3480_1            k144n01           /dev/380          3480      InUse  MANUAL
3480_1            k144n01           /dev/381          3480      Up     MANUAL
3480_1            k144n01           /dev/382          3480      InUse  MANUAL
3490_1            k144n05           /dev/513          3490      Up     MANUAL
3490_1            k144n05           /dev/510          3490      Up     MANUAL
3490_1            k144n05           /dev/511          3490      Up     MANUAL
3490_1            k144n05           /dev/512          3490      InUse  MANUAL
3494              k144n05           /dev/rmt1         3490      Down   IBMACS
3494              k144n05           /dev/rmt0         3490      Down   IBMACS
3494_2            k144n02           /dev/rmt1         3590      Resrv  IBMACS
3494_2            k144n02           /dev/rmt0         3590      Resrv  IBMACS
3590              k144n02           /dev/rmt2         3590      Up     IBMACL
SILO_1            sp10.swa.ibm.com  /dev/stk901       4490      Resrv  STKACS
SILO_1            sp10.swa.ibm.com  /dev/stk902       4490      Down   STKACS
SILO_2            sp09.swa.ibm.com  /dev/rmt1         9490      Down   STKACS
```

Obtaining Volume Information Using the VFILE Option

The VFILE option on **cltalloc** and **ctpalloc** lets you save volume information to a file and then use that information later when you need to read your tape data set. The volume information is a subset of the information normally found in a full function tape catalog.

If you would like to process an MVS tape on a NetTAPE device, you can use the information from the MVS tape catalog to create a volume information file NetTAPE can use. Then, you can use the **VDIR** option to specify its location when you allocate the tape device.

The format of the volume information file is:

```
version_number         /* NetTAPE version number - currently VERS0001.*/
user_name              /* Name of file owner.*/
vault_ID               /* The physical location of the tape (device pool
                          name). Use the –P option on the
                          cltalloc command or the ctpalloc subroutine
                          to override this value. */
label_type             /* Label type: AL, SL, or NL. */
number_of_volumes      /* Number of volumes the file spans.*/
file_sequence_num      /* The file's starting sequence number in the
                          first volume.*/
ext_vol_1, ext_vol_2, ....  /* The list of external volume IDs.*/
int_vol_1, int_vol_2, ....  /* The list of internal volume IDs. If
                               there are no internal volume IDs,
                               the string "NO_INT_VOL" appears here. */
```

Here is a sample volume information file:

```
VERS0001
ronglee
3494
NL
00000003
00000001
XYZ573,XYZ574,XYZ575
NO_INT_VOL
```

You can also obtain volume information using either the **cltvols** command, which returns volume information to standard output, or the **ctpvols** subroutine, which returns volume information to a structure. See “cltvols—Obtaining information about tape volumes used” on page 100 or “ctpvols or tpvols—Obtaining information about tape volumes used” on page 122 for more information.

Understanding MVS Tape Formats

NetTAPE lets you read a tape that was created on MVS or create a tape that can be read on MVS using the **cltalloc** command or the **ctpalloc** subroutine with tape allocation parameters equivalent to those found on MVS. This topic covers MVS tape format concepts and terminology related to these allocation parameters. For more information, see *MVS/DFP Using Magnetic Tape Labels and File Structure*.

Record formats

The *logical record* is the basic unit of information used by the processing program. It can be anything from a single character to a mass of information collected by a particular business transaction, or measurements recorded at a given point in an experiment. A *physical record* is a contiguous sequence of bytes written to or read from a tape as a unit. The maximum physical record size supported by NetTAPE is determined by the tape device driver being accessed. *Blocking* is the process of grouping logical records before they are written on a volume. A *block* is a physical record containing one or more logical records or parts of logical records.

The relationship between logical records, physical records on tape, and blocks is defined by the following parameters, which are provided by the client application when a tape file is opened:

RECFM The record format type

RECLN The maximum length of a logical record in bytes

BLKSZ The maximum length of a block in bytes

NetTAPE supports the following record formats:

U Unformatted. A block on tape is equated with a logical record. It is up to the application to interpret the contents of the block. Blocks can be of variable length. RECLN is the maximum record (and block) size. BLKSZ must be equal to RECLN.

F Fixed length. A block on tape contains exactly one logical record. All logical records are the same size, RECLN. BLKSZ must be equal to RECLN.

FB Fixed length blocked. A block on tape contains an integer multiple number of logical records. All logical records are the same size, RECLN. BLKSZ must be an integer (greater than 1) multiple of RECLN.

Volumes, Files and Data sets

Volume A dismountable physical unit of storage media, i.e., a reel of magnetic tape or a cartridge.

File or data set A series of physical record blocks, separated by inter-record gaps and terminated by a tape mark.

File organization A sequence of one or more tape volumes, each of which may contain one or more files. With a few restrictions, NetTAPE supports the following types of file organizations:

Single file, single volume.
Exactly one file on one tape volume.

Single file, multi volume
A single file that spans two or more volumes.

Multi file, single volume
Two or more files on a single volume.

Multi file, multi volume
Two or more files that span two or more volumes.

Markers

BOT, EOT Every tape volume contains physical (photoreflective) markers that delimit the writable area of a tape, the so-called Beginning-of-Tape (BOT) and End-of-Tape (EOT) markers. The ANSI tape standards prescribe that there is a minimum amount of writable magnetic tape following the EOT marker. A limited amount of data can therefore be written beyond the EOT marker.

TM Abbreviation for tape mark. A tape mark is a unique bit-pattern on tape that, at the lowest level, signals the end of a file. Two consecutive tape marks signify the logical end of a volume (LEOV).

Label Types

Magnetic tapes come in two basic flavors, called *non-labeled* and *labeled* tapes. Non-labeled tapes contain blocks of data, organized in files that are separated by tape marks. Labeled tapes also contain blocks of data and use tape marks to separate files, but in addition they contain labels that identify and control access to tape volumes and the files contained therein.

There is no standard mechanism for recording the volume serial number (volser) of a non-labeled tape on the magnetic tape itself. Non-labeled tapes are therefore identified only by an external volume identification (e.g., a sticky label). For labeled tapes the internal volume serial number (the volser, a 6 character string) is recorded in the VOL1 volume label. However, labeled tapes may also have an external volume identification (a 6-character string) that differs from the internally recorded volser.

NetTAPE supports the following label types:

NL Non-Labeled

AL ANSI X3.27-1987 (ISO 1001-1986) Labeled

SL IBM EBCDIC Standard Labeled

BLP Bypass Label Processing

AL and SL tapes are very similar. They differ mostly in the way character data is encoded in the labels (ASCII versus EBCDIC). AL and SL tapes contain volume, header and trailer labels. The volume label (VOL1) is written at the start of a tape, it contains the volume serial number (volser) and defines the owner of the tape. Header labels (HDR1, HDR2) delimit the start of a file and define the data that are

contained in the file. Similarly, trailer labels (EOF1, EOF2, EOV1, EOV2) delimit the end of a file. The EOF1, EOF2 trailer labels are used for single-file and multi-file single volume data sets. The EOV1, EOV2 trailer labels are used for single and multi file multi volume data sets. Note that for AL and SL tapes a sequence of labels constitutes in itself a file and is always closed with a tape mark.

BLP is not a label type, but a tape access mode. In BLP mode the VOL1, HDR1, HDR2, EOF1, EOF2, EOV1, EOV2 records that are part of AL and SL tapes, are also made available to (and must be processed by) the client code as if they were ordinary data records. For all other modes, label processing is shielded from the client application. BLP mode requires special authority, defined in **nettape.adm.config**.

File and Volume Mark Sequences

While non-labeled and labeled tapes differ vastly in the detail of the record and tape mark sequences at the start and end of a file and volume, NetTAPE still allows the client application to treat these tapes in a virtually identical fashion by handling all the label processing behind the scenes. To simplify the functional descriptions in the remainder of the document, the following additional terms are defined.

BOV Mark Sequence

A Beginning-Of-Volume mark sequence (BOV) signifies the beginning of the first file on a volume, irrespective of whether it is part of a single or multi volume data set. It consists of the following sequence:

Label Type	BOV Mark Sequence
AL	BOT, VOL1, HDR1, HDR2, TM
SL	BOT, VOL1, HDR1, HDR2, TM
NL	BOT
BLP	BOT

BOF Mark Sequence

A Beginning-Of-File mark sequence (BOF) signifies the beginning of a file other than the first file on a volume. It consists of the following sequence:

Label Type	BOF Mark Sequence
AL	HDR1, HDR2, TM
SL	HDR1, HDR2, TM
NL	None (implied by BOT or EOF mark sequence of preceding file)
BLP	None (implied by BOT or EOF mark sequence of preceding file)

EOF mark sequence

An End-Of-File mark sequence (EOF) signifies the end of a file. It consists of the following sequence:

Label Type	EOF Mark Sequence
AL	TM, EOF1, EOF2, TM

SL	TM, EOF1, EOF2, TM
NL	TM
BLP	TM

Note that when a volume is continued an EOV mark sequence (see below) replaces the EOF mark sequence. The end of the file on the continuation volume is still delimited by an EOF mark sequence. An additional tape mark is always written after the EOF mark sequence for the last file on the last volume in a data set to signify the logical end of volume (LEOV).

EOV mark sequence

An End-Of-Volume mark sequence (EOV) signifies the end of a volume that is continued onto a subsequent volume. It consists of the following sequence:

Label Type	EOV Mark Sequence
AL	TM, EOV1, EOV2, TM, TM
SL	TM, EOV1, EOV2, TM, TM

Understanding NetTAPE Tape Positioning

Note

The return codes mentioned here are described in “NetTAPE Tape Interface Return Values and Messages” on page 125.

NetTAPE follows MVS specifications for spacing on 3480 and 3490 tape drives. Forward Space File and Backward Space File pass the tape mark with a return code of 0 (NetTAPE_OK). When Forward Space Record or Backward Space Record encounters a tape mark, it crosses the tape mark and stops, returning a return code of -1 (NetTAPE_TEOF).

NetTAPE spacing behavior is the same for all supported devices, and is comparable to setting the Backward Space/Forward Space Record Mode to "SCSI Mode" on the SMIT mtdd and Atape device driver panels.

Unlabeled Tapes

When NetTAPE opens the tape, it positions the tape to the beginning (BOT).

ANSI or Standard Labeled Tapes

When NetTAPE opens the tape, it verifies the label information and positions the tape to the beginning of the first dataset or to the position specified by the file sequence number, if one is included.

Backward Space Record (BSR), Forward Space Record (FSR) do not pass tape marks. Tape Rewind (REW) rewinds the tape to the beginning of the dataset. Backward Space File (BSF), Forward Space File (FSF), and Write Tape Mark (WTM) are not allowed.

Bypass Label Processing

When NetTAPE opens a labeled tape for which bypass label processing (BLP) has been specified, it positions the tape to the beginning of the first dataset without verifying the label. To position the tape to the beginning of the tape (BOT), you must rewind it.

Suppressing End of Volume Processing

NetTAPE returns an End of Volume (NetTAPE_EOV) return code when it encounters two tape marks on a read operation. It returns an End of Tape (NetTAPE_EOT) return code, when it encounters the end of tape on a write operation.

If you specify the SUP_EOV option on an NetTAPE command or subroutine, NetTAPE does not notify you of an EOV or EOT condition. Instead, NetTAPE has the next available volume mounted automatically. For input tapes, NetTAPE returns EOV only when it encounters EOV for the last volume in the volser list.

Suppressing End of File Processing

NetTAPE returns an End of File (NetTAPE_TEOF) return code when it encounters the tape mark on a read operation. If you specify the SUP_EOF option on an NetTAPE command or subroutine, NetTAPE does not notify you of the EOF condition. Instead, NetTAPE skips the the tape mark and continues processing.

Understanding NetTAPE End of Tape Handling

When NetTAPE reaches either logical end (errno = ENOSPC) of tape or physical end of tape (errno = ENXIO) on a write operation, it returns control so you can mount the next volume.

However, if you specify the SUP_EOV option (Suppress End of Volume reporting) on **cltalloc**, **cltopen**, **ctpalloc**, or **ctpopen**, NetTAPE automatically mounts the next volume and continues processing. In this case, NetTAPE simulates a tape that is infinitely long.

Writing to Remote Tape Devices

When writing to a remote tape device, NetTAPE uses a write-behind mechanism to improve performance. When NetTAPE reaches either logical end of tape (errno = ENOSPC) or physical end of tape (errno = ENXIO) on a write operation to a remote device, it returns to you without writing the last buffer to tape. You must close the current tape and open the next, after which NetTAPE rewrites the write-behind buffer.

However, if you specify the SUP_EOV option (Suppress End of Volume reporting) on **cltalloc**, **cltopen**, **ctpalloc**, or **ctpopen**, NetTAPE automatically mounts the next volume and writes the write-behind buffer to the new volume.

If you wish to write an internal header at the beginning of each volume, you must disable the write-behind mechanism. You can do this by creating your own version of **nettape.config** in your $HOME directory and adding the option:

```
client.wbh no
```

Chapter 13. Troubleshooting Tips for Users

Here are some tips for usage-related errors:

- Return code **NetTAPE_COPNSRV_ERR (-13) from ctpalloc**:

  Verify that you have access to the node containing the device.

- Message **"The NetTAPE OPNSRV call failed" from cltalloc**:

  Verify that you have access to the node containing the device.

- **Allocation fails**

  Verify that you have a **$HOME/.netrc** file and that the permissions allow only reading and writing.

- **NetTAPE terminates while you are writing data to a multi-volume data set**:

  If NetTAPE terminates while a multi-volume data set is being written the operation mode of the tape device determines whether the write operation can complete successfully. For instance, suppose you are writing a three-volume data set and NetTAPE fails while you are writing to volume two:

  – With ACL mode, the write operation will be able to complete successfully, resulting in the expected three-volume data set.

  – With IBMACS or STKACS mode, writes to volume two will complete successfully but volume three will not be mounted. The write operation will need to be reinitiated starting with volume one.

  – With manual mode, writes to volume two will complete successfully, and, if you can have the operator mount the next volume, then writes to volume three will also complete successfully.

© Copyright IBM Corp. 1996

Chapter 14. Commands

Table 7 lists the NetTAPE commands and where they are described.

Table 7. NetTAPE Commands

Command	Description	Where Explained
cltalloc	Allocate a tape device and open the tape file	81
cltclose	Close the volume information file	91
cltopen	Access the next tape file	93
cltunall	Unallocate a tape device	99
cltvols	Obtain information about tape volumes used	100

Note:

You cannot issue NetTAPE commands from an effective user ID, meaning one assumed using the **su** or **sku** command to login as another user ID.

© Copyright IBM Corp. 1996

cltalloc—Allocating a tape device

Syntax

cltalloc [−**a**]
[−**B** *blocksize*]
[−**d** *dsname*]
[−**D** *device*[@*hostname*]]
[[−**e** *yyddd*] | [−**r** *nnnn*]]
[−**f** *device*]
[−**F** *tape_format*]
[−**h** *hostname*]
[−**l nl** | **al** | **blp** | **sl**]
[−**L** *record_length*]
[−**M** *tapemode*]
[−**n**]
[−**o** *"allocparms"*]
[−**P** *devpool*]
[−**R** *record_format*
[−**s** *fseq*]
[−**S** *source_category*]
[−**T** *target_category*]
[−**v** *volser*[**,***volser2*,...,*volsern*] | [−**v** **scratch**]
[−**V** *vol1*[**,***vol2*,...,*voln*]]]
[−**?**]

Parameters

−**a**

Specifies that you want to use the automatic cartridge loader (ACL) feature. ACL is supported on the 3480, 3490, and 3590 IBM tape devices. The ACL feature differs from ACF (automatic cartridge facility) in that ACL allows only sequential access to tapes in the cartridge loader while ACF can be used in a random access mode as a mini tape library.

You may specify −**a** only for a device defined in **nettape.adm.config** with the operation mode ibmacl or ibmacf.

You must also specify either the −**v** option or the −**V** option with the −**a** option.

−**B** *blocksize*

Specifies the size of the blocks or records. Use this option with the −**L** and −**R** options. This option does not apply to unformatted tapes (−**R U**); if you specify both −**R U** and −**B**, −**B** is ignored.

−**d** *dsname*

Specifies the name of a tape data set. The string *dsname* contains 1 to 44 characters. *dsname* is converted to upper case. If you omit −**d**, no data set name is used.

You must specify −**d** for standard label (**sl**) or ANSI label (**al**) tapes.

−**D** *device***[**@*hostname***]**

Specifies the full pathname of the preferred device, for example, /**dev**/**rmt0**. If you omit this parameter, NetTAPE selects a device from the specified (or default) device pool. If you want to request a device

on a specific host, you can use either the @*hostname* format of –**D** or –**h**. Using –**D** and –**h** lets you request a specific device. See Table 8 on page 87 for more information.

–**e** *yyddd*

Specifies the expiration date for a **new** data set. *yyddd* is a Julian date. If you omit this option, the default is no expiration date.

Note: –**e** and –**r** are mutually exclusive. You can specify the longevity of the tape as either an expiration date (–**e** *yyddd*) or as a number of days from now (–**r** *nnnn*).

–**f** *device*

Specifies the name of the special file for the virtual tape device you want NetTAPE to create. You can specify the file name as either a fully qualified path name or as a name relative to the current directory. NetTAPE performs dynamic device allocation to create a virtual tape device with this device name. If you don't specify –**f** *device*, NetTAPE creates **$HOME/mytape** and **$HOME/mytape.1**.

–**F** *tape_format*

tape_format is a string specifying the tape recording format. It can have one of these values:

basic	Basic (uncompacted) mode
compacted	Compacted mode
800	800 BPI, 9 track (NRZI format)
1600	1600 BPI, 9 track (PE format)
6250	6250 BPI, 9 track (GCR format)

The keywords **basic** and **compacted** may be supplied in upper, lower, or mixed case. They may be abbreviated down to a single letter (**b** and **c**).

If you omit –**F**, the default tape format is the format defined in SMIT when the device was configured.

–**h** *hostname*

Specifies the preferred hostname. *hostname* is a TCP/IP name.

See Table 8 on page 87 for more information. Using –**D** and –**h** lets you request a specific device.

–**l** *label_type*

Indicates the tape label type. *label_type* is one of:

AL ANSI X3.27-1987 (ISO 1001-1986) Labeled

BLP Bypass Label Processing

NL Unlabeled

SL IBM EBCDIC Standard Labeled

You may type **NL**, **AL**, **BLP**, and **SL** in upper, lower, or mixed case. The default is **nl**

Notes:

1. Bypassing label processing may circumvent data set access restrictions. Therefore you must have special authority (controlled by an entry in **nettape.adm.config**) to use **BLP**.

   For more information, see “Defining the User Access Control List” on page 29.

2. When you specify **SL** on a write operation, NetTAPE writes a standard label record (VOL1,HDR1,HDR2) at the beginning of the tape volume.
3. For **AL** (ANSI standard label) tapes, NetTAPE supports ANSI version 3 standard labels.
4. NetTAPE supports **AL** or **SL** tapes on 8mm devices, but only for single volume data sets. Furthermore, you must provide sufficient room at the end of the tape for trailer labels.

To write to a tape (any label type) or to read from a **nl** (no label) tape, you must specify either all of –**L** *record_length*, –**B** *blocksize*, and –**R** *record_format*, or none of the three.

For standard label (**sl**) or ANSI label (**al**) tapes, you must also specify the –**d** option.

–**L** *record_length*
: Specifies the length in bytes of logical records on the tape. Use this option with the –**B** and –**R** options.

–**M** *tapemode*
: Specifies the tape mode. Possible values for *tapemode* are:

  r Read
  w Write

  If you do not specify the tape mode, the default depends on whether you requested a scratch tape. If you request a specific tape volume using –**d** or –**v**, the default is **r** (read, rewind). If you do not specify –**d** or –**v**, the default is **w** (write, rewind).

–**n**
: Specifies that you do not want to wait for a tape device if one is not immediately available. If a tape is not available immediately, you receive a non-zero return value. The system administrator can use the **mount.queue** entry in **nettape.adm.config** to establish whether NetTAPE queues mount requests when a device is busy.

–**o "***allocparms***"**
: Specifies an optional parameter string, enclosed in double quotes. The string consists of one or more of the following keywords, separated by blanks:

  GEN=*file_gen_num*
  : Specifies a 4-digit file generation number. If you omit this keyword, this field is set to blanks.

MAX_DATA=*max_block_size*
Specifies the maximum block size the tape server must support when it reads from the tape or writes to the tape. This value must be greater than or equal to the largest data block read or written by your application.

The default is 65536 (64K) bytes.

OWNER=*owner*
Specifies a 14-character string identifying the owner of the tape. If you omit this keyword, this field is set to blanks.

SUP_EOF
Specifies that NetTAPE ignore EOF tape marks and continue processing the tape.

If you omit this keyword, NetTAPE returns the NetTAPE_TEOF return code when it reaches EOF on a read operation.

SUP_EOV
Specifies that NetTAPE automatically mount the next volume (if necessary), when End of Volume (EOV) or End of Tape (EOT) is reached.

If you omit this keyword, NetTAPE returns the NetTAPE_EOV return code when it reaches EOV on a read operation, or the NetTAPE_EOT return code when it reaches EOT on a write operation. When reading a tape, NetTAPE returns NetTAPE_EOV, when it reaches EOV on the last volume in the volume list.

For more information about EOT and EOV, see “Understanding NetTAPE Tape Positioning” on page 75.

For more information about return codes, see “NetTAPE Tape Interface Return Values and Messages” on page 125.

VDIR=*vol_id_dir*
Specifies the name of the directory where NetTAPE is to store (on a write operation) or retrieve (on a read operation) the file containing the volume information associated with data set specified by *dsname* on the –**d** option.

VDIR= is an optional keyword you can specify with the **VFILE** keyword.

VER=*version_num*
Specifies a 2-digit file version number. If you omit this keyword, this field is set to 0.

VFILE
On a write operation:

Specifies that NetTAPE is to save volume information for the data set specified by *dsname* on the –**d** option.

The volume information is saved in the file *dsname* in the **$HOME/.nettape**. To save the file in a different directory, specify that directory using the **VDIR**= option. For more information, see

"Obtaining Volume Information Using the VFILE Option" on page 71.

If you want this information sent to standard output, use the **cltvols** command instead. See "cltvols—Obtaining information about tape volumes used" on page 100 for more information.

On a read operation:

VFILE specifies that NetTAPE is to retrieve from **$HOME/.nettape** the volume information for the dataset specified by *dsname* on the –**d** option. If the volume information file is in a different directory, use the **VDIR**= option to specify its location.

The volume information file contains the name of the device pool where the data set was created. NetTAPE allocates the device from this pool unless you use the –**P** option to request that a different device pool be used. For more information, see "Obtaining Volume Information Using the VFILE Option" on page 71.

–**P** *devpool*

Specifies the device pool from which to allocate the device. If you do not specify the device pool, the default pool specified in **nettape.adm.config** is used. (See Table 8 on page 87.)

–**r** *nnnn*

Specifies the retention period for a **new** data set, in number of days.

Note: –**e** and –**r** are mutually exclusive. You can specify the longevity of the tape as either an expiration date (–**e** *yyddd*) or as a number of days from now (–**r** *nnnn*).

The default value is infinity (no expiration date).

–**R** *record_format*

Specifies the format of records on the tape. Supported values of *record_format* are:

U Unformatted
F Fixed
FB Fixed Blocked

You can use –**B** and –**L** to change the blocksize and record length of formatted tapes. The default *record_format* is **U**, unformatted tapes.

–**s** *fseq*

Specifies the sequence number of the data set on the tape. The default is 1, the first data set of the tape.

–**S** *source_category*

Specifies the source category from which a scratch volume is mounted. In some tape libraries, source category can be viewed as a scratch pool name. Specify *source_category* as a character string to use the device in manual mode; specify it as a number when using a library. If you don't specify –**S**, the category defaults to the definition in **nettape.adm.config**.

−**T** *target_category*

Specifies the target category to which a private volume is assigned. In some tape libraries, target categories can be viewed as private pool names. Specify *target_category* as a character string to use the device in manual mode; specify it as a number when using a library.

If you don't specify −**T**, the category defaults to the definition in **nettape.adm.config**.

−**v** *volser*[**,***volser2***,...,***volsern*]
−**v scratch**

Specifies the volser (external volume serial number) of one or more tapes. A *volser* is 1 to 6 characters. *volser* arguments are converted to upper case.

For a read operation, you must specify the −**v** option unless you use the VFILE option to specify volume information.

For a write operation, −**v** is optional. If you omit −**v** or specify −**v scratch**, a scratch tape is mounted.

For labeled tapes, NetTAPE uses the external volume serial number as the internal volume serial number unless you specify an internal volume serial number using the −**V** option.

−**V** *vol1***[,***vol2***,...,***voln***]**

Specifies the internal volume serial number each volume in the list −**v** *volser*,*volser2*,...,*volsern*. The internal volume number is 1 to 6 characters and is converted to upper case.

This option is for labeled tapes only. Use the −**V** option to specify an internal volume serial number that is different from the external volume serial number.

If you use the −**V** option, you must also specify the −**v** option.

−**?**

Displays the command syntax.

Description

This command:

1. Dynamically allocates a tape device from the device pool, esoteric device pool, or default device pool specified.
2. Opens the tape file for reading, writing, or updating (reading and writing).

Device pools, esoteric device pools, and the default device pool are defined in **nettape.adm.config**.

Table 8 on page 87 shows the interactions among the device, host name, and pool **cltalloc** parameters when you specify none, some, or all of them.

Table 8. Interactions among cltalloc parameters: pool, device and host name

Device	Host Name	Pool	Action
			NetTAPE looks in **nettape.adm.config** for a locally-attached device in the default pool. If one is not available, NetTAPE assigns another device in that pool.
√			Not supported
√	√		The specified device on the specified host must defined in **nettape.adm.config**.
√	√	√	The specified device on the specified host must be defined as a member of the specified pool in **nettape.adm.config**.
√		√	Not supported
	√	√	NetTAPE looks for any device on the specified host that is defined in the specified pool in **nettape.adm.config**.
	√		NetTAPE looks for any device on the specified host that is defined in the default pool in **nettape.adm.config**.
		√	NetTAPE looks in **nettape.adm.config** for a locally-attached device in the specified pool. If one is not available, NetTAPE assigns another device in the that pool.

Usage Notes

You must have a **.netrc** file defined. See “Step 4: Customizing Your .netrc File” on page 41 for information about creating a **.netrc** file.

Messages and Responses

The following messages are issued by **cltalloc**:

- `cltalloc: volser is now mounted on /mydir/mytape`

  The **cltalloc** command was successful.

- `cltalloc: Allocation failed on volser for /mydir/mytape: A tape is already mounted`

- `cltalloc: Allocation failed on volser for /mydir/mytape: Dynamic allocation failed`

  Either the tape pseudo device could not be loaded or the tape device special file could not be created.

- `cltalloc: /mydir/mytape could not be created`

  The symbolic link, */mydir/mytape*, could not be created because NetTAPE does not have write access to */mydir*.

- `cltalloc: dsname cannot be more than 44 chars`

- `cltalloc: retention period should be nnnn`

  The retention period must be entered as a decimal number of days.

- `cltalloc: expiration date should be yyddd`

The expiration date must be entered as *yyddd* where *ddd* is the Julian date.

- `cltalloc: -r and -e are mutually exclusive`

  You cannot specify both an expiration date and a retention period.

- `cltalloc: volser cannot be more than 6 chars`
- `cltalloc: Values for -S and -T cannot be equal`

  The source catalog and the target catalog must be different.

- `cltalloc: NL tapes on read require a blksz, recfm, and recln`

  NL tapes require a block size, a record format, and a record length.

- `cltalloc: AL and SL tapes require DSN`
- `cltalloc: Use of -a option must include either -v or -V`

  The automatic cartridge loader requires a list of volume serial numbers or volume IDs.

- `cltalloc: Invalid option: -p`

  The –**p** option is valid only with the CLIO/S product.

- `cltalloc: Invalid option: -c`

  The –**c** option is valid only with the CLIO/S product.

- `cltalloc: Invalid file sequence number`

  The file sequence number must be an integer.

- `cltalloc: Extra parameters ignored`

  Parameters were detected that could not be associated with a flag. These were ignored. For instance: **cltalloc** –**P** 3490A SL, where SL is not associated with a flag.

- `cltalloc: For Unformatted records Blocksize must equal record length`
- `cltalloc: For Fixed Block records Blocksize must be multiple of record length`
- `cltalloc: For Fixed Block records Blocksize must be multiple of record length`
- `cltalloc: For Variable records Blocksize must be record length + 8`
- `cltalloc: For Variable block records Blksize must be record length + 8`
- `cltalloc: For Variable block records Blksize must be record length + 8`

See “NetTAPE Tape Interface Return Values and Messages” on page 125 for additional messages.

Examples

Here are some basic ways to use **cltalloc**:

1. To allocate a device from the default device pool and mount a scratch tape on that device, specify the following (the default device special file associated with the tape pseudo device is **$HOME/mytape**):

   ```
   cltalloc
   ```

2. To allocate any device in the 3490 device pool:

```
cltalloc -P 3490
```

3. To allocate a specific device (510 on node k144n05), use either of the following:

```
cltalloc -D /dev/510@k144n05
cltalloc -D /dev/510 -h k144n05
```

4. To allocate any device in the 3490 device pool, tar $HOME/tape_stuff, and then unallocate the device:

```
cltalloc -P 3490
tar -cvf $HOME/mytape $HOME/tape_stuff
cltunall
```

5. To allocate any device in the 3490 device pool with a volser and a new data set name:

```
cltalloc -P 3490  -v extv12 -d new.data.set
```

6. To allocate any device in 3490 pool specifying the device special file, tar to tape, and then unallocate the device:

```
cltalloc -P 3490 -f my_special_file
tar -cvf my_special_file $HOME/tape_stuff
cltunall -f my_special_file
```

Here are some more sophisticated ways to use **cltalloc**:

1. Request a tape device for reading the third file on volume **extv1**. The data set continues on a second volume, **extv2**. **cltalloc** ensures that the data set name encoded on the tape is **totals.8.12.84**. The device special file name you use to read the data is /**tmp**/**mybackup**.

```
cltalloc -f /tmp/mybackup -v extv1,extv2 -s 3 -d totals.8.12.84
```

2. To read a tape data set that spans multiple volumes and using a device with the ACL (automatic cartridge loader) feature, issue a single mount request for both tapes by including the –**a** option:

```
cltalloc -v extv1,extv2 -d mydata -a
```

   If you omit –**a**, the operator receives a separate mount request for each volume in the – list. The mount request for the second volume (**extv2**) is sent when end-of-tape is reported for the first volume.

3. The following sequence of commands demonstrates how to use **cltalloc** and **cltopen** to read two **tar** files that are written as the first and third data sets on a tape. The virtual device is accessed with the device special file /**viking**/**tape01**.

```
cltalloc -v extvol -s 1 -f /viking/tape01
tar -xvf /viking/tape01
cltopen -s 3 -f /viking/tape01
tar -xvf /viking/tape01
cltunall -f /viking/tape01
```

Files

$HOME/.netrc	The **.netrc** file with password information.
/etc/nettape.adm.config	The NetTAPE configuration file, **nettape.adm.config**.

Related Topics

Commands: **cltopen**, **cltunall**

cltclose—Closing the volume information file

Syntax

cltclose [–**f** *device_special_file*]
[–**?**]

Parameters

–**f**

Specifies the name of the device special file created by the preceding **cltalloc** command. If you omit this keyword, NetTAPE uses **$HOME/mytape** or **$HOME/mytape.1**.

–**?**

Displays the command syntax.

Description

The **cltclose** command closes the volume information file created using the VFILE option on the **cltalloc** and **cltopen** commands.

Messages and Responses

See “NetTAPE Tape Interface Return Values and Messages” on page 125 for information about messages.

Examples

1. Backup two files to tape using the **VFILE** option, using **cltclose** to close the **VFILE** file:

```
cltalloc -P 3494 -f my3494 -d file_01_021196 -o "VFILE"
tar -vcf my3494 backup_file_01
cltclose -f my3494

cltopen -f my3494 -d file_02_021196 -o "VFILE"
tar -vcf my3494 backup_file_02
cltclose -f my3494

cltunall -f my3494
```

2. Restore two files from tape using the **VFILE** option:

```
cltalloc -f my3494 -d file_01_021196 -o "VFILE"
tar -vxf my3494
cltclose -f my3494

cltopen -f my3494 -d file_02_021196 -o "VFILE"
tar -vxf my3494
cltclose -f my3494

cltunall -f my3494
```

Files

$HOME/.netrc	The **.netrc** file with password information.
/etc/nettape.adm.config	The NetTAPE configuration file, **nettape.adm.config**.

Related Topics

Commands: **cltalloc**, **cltopen**

For more information on the VFILE option, see “Obtaining Volume Information Using the VFILE Option” on page 71.

cltopen—Accessing the next tape file

Syntax

cltopen [−**a**]
[−**B** *blocksize*]
[−**d** *dsname*]
[[−**e** *yyddd*] | [−**r** *nnnn*]]
[−**f** *device_special_file*]
[−**F** *tape_format*]
[−**l nl** | **al** | **blp** | **sl**]
[−**L** *record_length*]
[−**o** *"allocparms"*]
[−**R** *recfm*]
[−**s** *fseq*]
[−**S** *source_category*]
[−**T** *target_category*]
[−**v** *volser*[**,***volser2*,...,*volsern*] | [−**v scratch**]
[−**V** *vol1*[**,***vol2*,...,*voln*]]]
[−**?**]

Parameters

−**a**

Specifies that you want to use the automatic cartridge loader (ACL) feature. ACL is supported on the 3480, 3490, and 3590 IBM tape devices. The ACL feature differs from ACF (automatic cartridge facility) in that ACL allows only sequential access to tapes in the cartridge loader while ACF can be used in a random access mode as a mini tape library.

You may specify −**a** only for a device defined in **nettape.adm.config** with the operation mode ibmacl or ibmacf.

You must also specify either the −**v** option or the −**V** option with the −**a** option.

−**B** *blocksize*

Specifies the size of the blocks or records. Use this option with the −**L** and −**R** options. This option does not apply to unformatted tapes (−**R U**); if you specify both −**R U** and −**B**, −**B** is ignored.

−**d** *dsname*

Specifies the name of a tape data set. The string *dsname* contains 1 to 44 characters. *dsname* is converted to upper case. If you omit −**d**, no data set name is used.

You must specify −**d** for standard label (**sl**) or ANSI label (**al**) tapes.

−**e** *yyddd*

Specifies the expiration date for a **new** data set. *yyddd* is a Julian date. If you omit this option, the default is no expiration date.

Note: −**e** and −**r** are mutually exclusive. You can specify the longevity of the tape as either an expiration date (−**e** *yyddd*) or as a number of days from now (−**r** *nnnn*).

–**f** *device_special_file*
Specifies the name of the device special file for the tape pseudo device you are using. This is a name previously defined with the –**f** option of **cltalloc**.

You can specify the file name as either a fully qualified path name or as a name relative to the current directory. If you don't specify –**f** *device*, NetTAPE uses **$HOME/mytape** or **$HOME/mytape.1**.

–**F** *tape_format*
tape_format is a string specifying the tape recording format. It can have one of these values:

basic	Basic (uncompacted) mode
compacted	Compacted mode
800	800 BPI, 9 track (NRZI format)
1600	1600 BPI, 9 track (PE format)
6250	6250 BPI, 9 track (GCR format)

The keywords **basic** and **compacted** may be supplied in upper, lower, or mixed case. They may be abbreviated down to a single letter (**b** and **c**).

If you omit –**F**, the default tape format is the format defined in SMIT when the device was configured.

–**l** *label_type*
Indicates the tape label type. *label_type* is one of:

AL ANSI X3.27-1987 (ISO 1001-1986) Labeled

BLP Bypass Label Processing

NL Unlabeled

SL IBM EBCDIC Standard Labeled

You may type **NL**, **AL**, **BLP**, and **SL** in upper, lower, or mixed case. The default is **nl**

Notes:

1. Bypassing label processing may circumvent data set access restrictions. Therefore you must have special authority (controlled by an entry in **nettape.adm.config**) to use **BLP**.

   For more information, see “Defining the User Access Control List” on page 29.

2. When you specify **SL** on a write operation, NetTAPE writes a standard label record (VOL1,HDR1,HDR2) at the beginning of the tape volume.
3. For **AL** (ANSI standard label) tapes, NetTAPE supports ANSI version 3 standard labels.
4. NetTAPE supports **AL** or **SL** tapes on 8mm devices, but only for single volume data sets. Furthermore, you must provide sufficient room at the end of the tape for trailer labels.

To write to a tape (any label type) or to read from a **nl** (no label) tape, you must specify either all of –**L** *record_length*, –**B** *blocksize*, and –**R** *record_format*, or none of the three.

For standard label (**sl**) or ANSI label (**al**) tapes, you must also specify the –**d** option.

–**L** *record_length*
Specifies the length in bytes of logical records on the tape. Use this option with the –**B** and –**R** options.

–**o "***allocparms***"**
Specifies an optional parameter string, enclosed in double quotes. The string consists of one or more of the following keywords, separated by blanks:

GEN=*file_gen_num*
Specifies a 4-digit file generation number. If you omit this keyword, this field is set to blanks.

OWNER=*owner*
Specifies a 14-character string identifying the owner of the tape. If you omit this keyword, this field is set to blanks.

SUP_EOF
Specifies that NetTAPE ignore EOF tape marks and continue processing the tape.

If you omit this keyword, NetTAPE returns the NetTAPE_TEOF return code when it reaches EOF on a read operation.

SUP_EOV
Specifies that NetTAPE automatically mount the next volume (if necessary), when End of Volume (EOV) or End of Tape (EOT) is reached.

If you omit this keyword, NetTAPE returns the NetTAPE_EOV return code when it reaches EOV on a read operation, or the NetTAPE_EOT return code when it reaches EOT on a write operation. When reading a tape, NetTAPE returns NetTAPE_EOV, when it reaches EOV on the last volume in the volume list.

For more information about EOT and EOV, see “Understanding NetTAPE Tape Positioning” on page 75.

For more information about return codes, see “NetTAPE Tape Interface Return Values and Messages” on page 125.

VDIR=*vol_id_dir*
Specifies the name of the directory where NetTAPE is to store (on a write operation) or retrieve (on a read operation) the file containing the volume information associated with data set specified by *dsname* on the –**d** option.

VDIR= is an optional keyword you can specify with the **VFILE** keyword.

VER=*version_num*
Specifies a 2-digit file version number. If you omit this keyword, this field is set to 0.

VFILE
On a write operation:

Specifies that NetTAPE is to save volume information for the data set specified by *dsname* on the –**d** option.

The volume information is saved in the file *dsname* in the **$HOME/.nettape**. To save the file in a different directory, specify that directory using the **VDIR** option. For more information, see "Obtaining Volume Information Using the VFILE Option" on page 71.

If you want this information sent to standard output, use the **cltvols** command instead. See "cltvols—Obtaining information about tape volumes used" on page 100 for more information.

On a read operation:

VFILE specifies that NetTAPE is to retrieve from **$HOME/.nettape** the volume information for the dataset specified by *dsname* on the –**d** option. If the volume information file is in a different directory, use the **VDIR** option to specify its location. For more information, see "Obtaining Volume Information Using the VFILE Option" on page 71.

–**r** *nnnn*
Specifies the retention period for a **new** data set, in number of days.

Note: –**e** and –**r** are mutually exclusive. You can specify the longevity of the tape as either an expiration date (–**e** *yyddd*) or as a number of days from now (–**r** *nnnn*).

The default value is infinity (no expiration date).

–**R** *record_format*
Specifies the format of records on the tape. Supported values of *record_format* are:

U Unformatted
F Fixed
FB Fixed Blocked

You can use –**B** and –**L** to change the blocksize and record length of formatted tapes. The default *record_format* is **U**, unformatted tapes.

–**s** *fseq*
Specifies the sequence number of the data set on the tape. The default is 1, the first data set of the tape.

–**S** *source_category*
Specifies the source category from which a scratch volume is mounted. In some tape libraries, source category can be viewed as a scratch pool name. Specify *source_category* as a character string to use the device in manual mode; specify it as a number when using a library. If you don't specify –**S**, the category defaults to the definition in **nettape.adm.config**.

−**T** *target_category*
: Specifies the target category to which a private volume is assigned. In some tape libraries, target categories can be viewed as private pool names. Specify *target_category* as a character string to use the device in manual mode; specify it as a number when using a library.

  If you don't specify −**T**, the category defaults to the definition in **nettape.adm.config**.

−**v** *volser*[**,***volser2***,...,***volsern*]
−**v scratch**
: Specifies the volser (external volume serial number) of one or more tapes. A *volser* is 1 to 6 characters. *volser* arguments are converted to upper case.

  For a read operation, you must specify the −**v** option unless you use the VFILE option to specify volume information.

  For a write operation, −**v** is optional. If you omit −**v** or specify −**v scratch**, a scratch tape is mounted.

  For labeled tapes, NetTAPE uses the external volume serial number as the internal volume serial number unless you specify an internal volume serial number using the −**V** option.

−**V** *vol1*[**,***vol2***,...,***voln*]
: Specifies the internal volume serial number for each volume in the list −**v** *volser*,*volser2*,...,*volsern*. The internal volume identifier is 1 to 6 characters and is converted to upper case.

  This option is for labeled tapes only. Use the −**V** option to specify an internal volume serial number that is different from the external volume serial number.

  If you use the −**V** option, you must also specify the −**v** option.

−**?**
: Displays the command syntax.

Description

Use the **cltopen** command when you want to continue using the previous assigned tape drive to do additional tape I/O with modified parameters. For example, you can use **cltopen** to:

- Specify a different data set name
- Reposition the tape
- Change allocation parameters.

cltopen accepts a subset of the options provided by the **cltalloc** command, letting you override those values as well as the defaults.

Note: **cltopen** defers any necessary volume switch until the application issues the **open()** system call.

Messages and Responses

See “NetTAPE Tape Interface Return Values and Messages” on page 125 for information about messages.

Examples

1. To change the data set name for the next operation to a tape mounted on the device previously allocated as **$HOME/mytape**, use:

   ```
   cltopen -d really.neat.data
   ```

2. To reposition the tape to read the fourth data set on the device specified by **/lab/tapes/tape1**, use:

   ```
   cltopen -f /lab/tapes/tape1 -s 4
   ```

3. To request that a different tape volume to be mounted on the previous assigned tape drive **$HOME/mytape**, allocated as add some extra options:

   ```
   cltopen -f $HOME/mytape -V myvol2 -v extlb2
   ```

4. The following sequence of commands demonstrates how to use **cltalloc** and **cltopen** to read two **tar** files that are written as the first and third data sets on a tape. The virtual device is accessed with the device special file **/viking/tape01**.

   ```
   cltalloc -v extvol -s 1 -f /viking/tape01
   tar -xvf /viking/tape01
   cltopen -s 3 -f /viking/tape01
   tar -xvf /viking/tape01
   cltunall -f /viking/tape01
   ```

5. The following sequence of commands demonstrates how to use **cltalloc** and **cltopen** to read two **tar** files that are written as the first and third data sets on a tape. The virtual device is accessed with the device special file **/viking/tape01**.

   ```
   cltalloc -v extvol -s 1 -f /viking/tape01
   tar -xvf /viking/tape01
   cltopen -s 3 -f /viking/tape01
   tar -xvf /viking/tape01
   cltunall -f /viking/tape01
   ```

Files

$HOME/.netrc	The **.netrc** file with password information.
/etc/nettape.adm.config	The NetTAPE configuration file, **nettape.adm.config**.

Related Topics

Commands: **cltalloc cltunall**

cltunall—Unallocating a tape device

Syntax

cltunall [–**f** *device_special_file*]

Parameters

–**f** *device_special_file*

Specifies the name of the device special file created by the preceding **cltalloc** command. If you omit this keyword, NetTAPE uses **$HOME/mytape** or **$HOME/mytape.1**.

Description

This command unallocated the tape device.

Messages and Responses

This command displays one of the following messages upon completion:

- `cltunall: Error - no tape is allocated on /dev/pst`*n*

  A tape is already mounted.

- `cltunall: Tape on /dev/pst`*n*` is now unallocated`
- `cltunall: Usage: cltunall -f device`

See “NetTAPE Tape Interface Return Values and Messages” on page 125 for information about messages.

Examples

To unallocate the tape device **$HOME/mytape**, issue:

```
cltunall -f $HOME/mytape
```

Files

$HOME/.netrc	The **.netrc** file with password information.
/etc/nettape.adm.config	The NetTAPE configuration file, **nettape.adm.config**.

Related Topics

Commands: **cltalloc**

cltvols—Obtaining information about tape volumes used

The **cltvols** command returns information about the tape volumes used by the data set that is currently in use.

Syntax

cltvols [–**f** *device_special_file*]
[–**s**]
[–**v**]
[–**V**]
[–**?**]

Parameters

–**f** *device_special_file*
Specifies the name of the device special file created by the preceding **cltalloc** command. If you omit this keyword, NetTAPE uses **$HOME/mytape** or **$HOME/mytape.1**.

–**s**
Specifies that only file sequence information is to be returned.

–**v**
Specifies that only information about external tape volume IDs is to be returned.

–**V**
Specifies that only information about internal tape volume IDs is to be returned.

–**?**
Displays the command syntax.

Description

The **cltvols** command writes to standard output information about the tape volumes used.

To have this information written to a file instead, specify the VFILE option on the **cltalloc** command. See “cltalloc—Allocating a tape device” on page 81 for more information. Here's when to use **cltvols**:

When	Because
Reading and writing tapes	To confirm the volume ID
Writing to a scratch tape	To learn the volume ID
Writing a multi-volume tape	To confirm the volume ID (in case the write operation spanned a volume)

This command performs the same function as **ctpvols()** subroutine.

Messages and Responses

See “NetTAPE Tape Interface Return Values and Messages” on page 125 for information about messages.

Examples

Backup a file to tape, obtain information about the volumes used, then unallocate the device.

```
cltalloc -P 3494 -l sl -f my3494
tar -vcf my3494 backup_file

cltvols -f my3494

Total Number of volumes: 3
File Sequence Number: 1
External Volume IDs: XYZ300,XYZ301,XYZ302
Internal Volume IDs: XYZ300,XYZ301,XYZ302

cltvols -f my3494 -s
1

cltvols -f my3494 -v
XYZ300,XYZ301,XYZ302

cltvols -f my3494 -V
XYZ300,XYZ301,XYZ302

cltunall -f my3494
```

Files

$HOME/.netrc	The **.netrc** file with password information.
/etc/nettape.adm.config	The NetTAPE configuration file, **nettape.adm.config**.

cltvols—Obtaining information about tape volumes used

Chapter 15. Application Programming Interfaces

The NetTAPE tape subroutines, which are available in both C and FORTRAN, are described in this section. The following table lists the NetTAPE tape subroutines, their functions, and where they are explained.

Subroutine			
C	**FORTRAN**	**Description**	**Page**
ctpalloc	tpalloc	Allocate a tape device	104
ctpclose	tpclose	Close the tape file	110
ctpopen	tpopen	Open the tape file	111
ctpread	tpread	Read the tape	117
ctprew	tprew	Rewind the tape	118
ctpskpf	tpskpf	Skip tape files	119
ctpskpr	tpskpr	Skip tape records	120
ctpunall	tpunall	Unallocate a tape device	121
ctpvols	tpvols	Obtain information about the tape volumes used.	122
ctpweof	tpweof	Write tape marks	123
ctpwrite	tpwrite	Write to tape	124

Compiling, Linking, and Running with the NetTAPE API

To use NetTAPE subroutines, you'll need the following information:

- The NetTAPE header file is in **/usr/lpp/clnettape/inc/fcftpint.h**.
- The NetTAPE subroutine library is located in **/usr/lib/libclios.a**.
- A sample **makefile** is in **/usr/lpp/nettape/samples/api/api**. Copy it to your own directory and customize it for your use.

Finding the NetTAPE API Examples File

The directory **/usr/lpp/nettape/samples/api** contains a sample programs that uses the NetTAPE application programming interfaces. You can make a copy of these files and modify them for your use.

© Copyright IBM Corp. 1996

ctpalloc or tpalloc—Allocating a tape device

Description

Use this function to request a tape device.

Syntax

Language	Programming Syntax
C	**int ctpalloc (int** ******tlu***, char** ******node***, int** *maxdata***, char** ******allocparms***, char** ******utility* **)**
FORTRAN	**tpalloc (** *tlu***,** *node***,** *maxdata***,** *allocparms***,** *utility***,** *ret* **)**

tlu Is a pointer to an integer (INTEGER*4) representing the tape logical unit number. This value is returned from the **ctpalloc** routine; subsequent tape calls refer to this device. Note that the other calls use the value of *tlu* rather than its address (&*tlu*). An application or group of applications can allocate up to 10 tape units with successive calls to this routine.

node Is a pointer (CHARACTER*(*)). Code this parameter as a null pointer, NetTAPE does not use it. It is maintained for compatibility with the CLIO/S product.

maxdata Is an input integer (INTEGER*4) representing the maximum block size the tape server must support when it reads from the tape or writes to the tape. This value should be greater than or equal to the largest data block read or written by your application.

The default is 65536 (64K) bytes.

allocparms

Is a pointer (CHARACTER*(*)) to the allocation parameters. The *allocparms* string is limited to 256 bytes in length. *allocparms* specifies information needed to request a tape device. A sample *allocparms* string is:

```
pool=3490_1 vol=myvol1 sl
```

The following allocation parameters are supported:

ACL Specifies that you want to use the automatic cartridge loader (ACL) feature. ACL is supported on the 3480, 3490, and 3590 IBM tape devices. The ACL feature differs from ACF (automatic cartridge facility) in that ACL allows only sequential access to tapes in the cartridge loader while ACF can be used in a random access mode as a mini tape library.

You may specify **ACL** only for a device defined in **nettape.adm.config** with the operation mode ibmacl or ibmacf.

You must also specify either the **VOL**= option or the **VID**= option with the **ACL** option.

BLKSZ=*blocksize*

Specifies the size of the blocks or records. Use this option with the **RECLN**= and **RECFM**= options. This option does

not apply to unformatted tapes (**RECFM**=**U**); if you specify both **RECFM**=**U** and **BLKSZ**=, **BLKSZ**= is ignored.

DEV=*device*[@*hostname*]
Specifies the full pathname of the preferred device, for example, /**dev**/**rmt0**. If you omit this parameter, NetTAPE selects a device from the specified (or default) device pool. If you want to request a device on a specific host, you can use either the @*hostname* format of **DEV**= or **HOST**=. Using **DEV**= and **HOST**= lets you request a specific device. See Table 8 on page 87 for more information.

DSN=*dsname*
Specifies the name of a tape data set. The string *dsname* contains 1 to 44 characters. *dsname* is converted to upper case. If you omit **DSN**=, no data set name is used.

You must specify **DSN**= for standard label (**sl**) or ANSI label (**al**) tapes.

EX=*yyddd*
Specifies the expiration date.

FSEQ=*fseq*
Specifies the sequence number of the data set on the tape. The default is 1, the first data set of the tape.

GEN=*file_gen_num*
Specifies a 4-digit file generation number. If you omit this keyword, this field is set to blanks.

HOST=*hostname*
Specifies the preferred hostname. *hostname* is a TCP/IP name.

See Table 8 on page 87 for more information.

NL, SL, AL, BLP
Specifies tape label attributes.

AL	ANSI X3.27-1987 (ISO 1001-1986) Labeled
BLP	Bypass Label Processing
NL	Unlabeled
SL	IBM EBCDIC Standard Labeled

You may type **NL**, **AL**, **BLP**, and **SL** in upper, lower, or mixed case. The default is **nl**

Notes:

1. Bypassing label processing may circumvent data set access restrictions. Therefore you must have special authority (controlled by an entry in **nettape.adm.config**) to use **BLP**.

   For more information, see “Defining the User Access Control List” on page 29.

2. When you specify **SL** on a write operation, NetTAPE writes a standard label record (VOL1,HDR1,HDR2) at the beginning of the tape volume.
3. For **AL** (ANSI standard label) tapes, NetTAPE supports ANSI version 3 standard labels.
4. NetTAPE supports **AL** or **SL** tapes on 8mm devices, but only for single volume data sets. Furthermore, you must provide sufficient room at the end of the tape for trailer labels.

To write to a tape (any label type) or to read from a **nl** (no label) tape, you must specify either all of **RECLN**=, **BLKSZ**=, and **RECFM**=, or none of the three.

For standard label (**sl**) or ANSI label (**al**) tapes, you must also specify the **DSN**= option.

NOWAIT Specifies that you do not want to wait for a tape device if one is not immediately available. If a tape is not available immediately, you receive a non-zero return value. The system administrator can use the **mount.queue** entry in **nettape.adm.config** to establish whether NetTAPE queues mount requests when a device is busy.

OWNER=*owner*
Specifies a 14-character string identifying the owner of the tape. If you omit this keyword, this field is set to blanks.

POOL=*devpool*
Specifies the device pool from which to allocate the device. If you do not specify the device pool, the default pool specified in **nettape.adm.config** is used. (See Table 8 on page 87.)

RECFM=*record_format*
Specifies the format of records on the tape. Supported values of *record_format* are:

U	Unformatted
F	Fixed
FB	Fixed Blocked

You can use **BLKSZ**= and **RECFM**= to change the blocksize and record length of formatted tapes. The default *record_format* is **U**, unformatted tapes.

RECLN=*record_length*
Specifies the length in bytes of logical records on the tape. Use this option with the **BLKSZ**= and **RECFM**= options.

RET=*num* Specifies the retention period.

SUP_EOF
Specifies that NetTAPE ignore EOF tape marks and continue processing the tape.

If you omit this keyword, NetTAPE returns the NetTAPE_TEOF return code when it reaches EOF on a read operation.

SUP_EOV

Specifies that NetTAPE automatically mount the next volume (if necessary), when End of Volume (EOV) or End of Tape (EOT) is reached.

If you omit this keyword, NetTAPE returns the NetTAPE_EOV return code when it reaches EOV on a read operation, or the NetTAPE_EOT return code when it reaches EOT on a write operation. When reading a tape, NetTAPE returns NetTAPE_EOV, when it reaches EOV on the last volume in the volume list.

For more information about EOT and EOV, see "Understanding NetTAPE Tape Positioning" on page 75.

For more information about return codes, see "NetTAPE Tape Interface Return Values and Messages" on page 125.

SRC=*source_category*

Specifies the source category from which a scratch volume is mounted. In some tape libraries, source category can be viewed as a scratch pool name. Specify *source_category* as a character string to use the device in manual mode; specify it as a number when using a library. If you don't specify **SRC**=, the category defaults to the definition in **nettape.adm.config**.

TAR=*target_category*

Specifies the target category to which a private volume is assigned. In some tape libraries, target categories can be viewed as private pool names. Specify *target_category* as a character string to use the device in manual mode; specify it as a number when using a library.

If you don't specify **TAR**=, the category defaults to the definition in **nettape.adm.config**.

TFMT=*tape_format*

Specifies the tape density. *tape_format* is a string specifying the tape recording format. It can have one of these values:

basic	Basic (uncompacted) mode
compacted	Compacted mode
800	800 BPI, 9 track (NRZI format)
1600	1600 BPI, 9 track (PE format)
6250	6250 BPI, 9 track (GCR format)

The keywords **basic** and **compacted** may be supplied in upper, lower, or mixed case. They may be abbreviated down to a single letter (**b** and **c**).

If you omit **TFMT**=, the default tape format is the format defined in SMIT when the device was configured.

TMODE=*tapemode*

Specifies the tape mode. Possible values for *tapemode* are:

r	Read
w	Write

If you do not specify the tape mode, the default depends on whether you requested a scratch tape. If you request a specific tape volume using **DSN**= or **VOL**=, the default is **r** (read, rewind). If you do not specify **DSN**= or **VOL**=, the default is **w** (write, rewind).

VDIR=*vol_id_dir*

Specifies the name of the directory where NetTAPE is to store (on a write operation) or retrieve (on a read operation) the file containing the volume information associated with data set specified by **DSN**=*dsname*.

VDIR= is an optional keyword you can specify with the **VFILE** keyword.

VER=*version_num*

Specifies a 2-digit file version number. If you omit this keyword, this field is set to 0.

VFILE On a write operation:

Specifies that NetTAPE is to save volume information for the data set specified by *dsname* on the –**d** option.

The volume information is saved in the file *dsname* in the **$HOME/.nettape**. To save the file in a different directory, specify that directory using the **VDIR**= option. For more information, see “Obtaining Volume Information Using the VFILE Option” on page 71.

If you want this information saved to a buffer, use the **ctpvols** subroutine instead. See “ctpvols or tpvols—Obtaining information about tape volumes used” on page 122 for more information.

On a read operation:

VFILE specifies that NetTAPE is to retrieve from **$HOME/.nettape** the volume information for the data set specified by *dsname* on the –**d** option. If the volume information file is in a different directory, use the **VDIR**= option to specify its location.

The volume information file contains the name of the device pool where the data set was created. NetTAPE allocates the device from this pool unless you use the **POOL**= option to request that a different device pool be used. For more information, see “Obtaining Volume Information Using the VFILE Option” on page 71.

VID=*int_volid*[**,***int_volid2*,**...,***int_volid*]

Specifies the internal volume serial number for each volume in the list VOL=*volser*,*volser2*,...,*volsern*. The internal volume identifier is 1 to 6 characters and is converted to upper case.

This option is for labeled tapes only. Use the **VID**= option to specify an internal volume serial number that is different from the external volume serial number.

If you use the **VID**= option, you must also specify the **VOL**= option.

VOL=**scratch**
VOL=*volser*[**,***volser2***,...,***volsern*]
Specifies the volser (external volume serial number) of one or more tapes. A *volser* is 1 to 6 characters. *volser* arguments are converted to upper case.

For a read operation, you must specify the **VOL**= option unless you use the VFILE option to specify volume information.

For a write operation, **VOL**= is optional. If you omit **VOL**= or specify **VOL**=**scratch**, a scratch tape is mounted.

For labeled tapes, NetTAPE uses the external volume serial number as the internal volume serial number unless you specify an internal volume serial number using the **VID**= option.

utility Is a pointer (CHARACTER*(*)). Code this parameter as a null pointer, NetTAPE does not use it. It is maintained for compatibility with the CLIO/S product.

ret Is an integer (INTEGER*4) representing the return value.

Return Values

This function returns one of the following return values:

0	NetTAPE_OK
–6	NetTAPE_COMM_ERR
–10	NetTAPE_ALLINUSE
–11	NetTAPE_UNKNOWN_NODE
–12	NetTAPE_COPNPAR_ERR
–13	NetTAPE_COPNSRV_ERR
–17	NetTAPE_NOTPSRV

See “NetTAPE Tape Interface Return Values and Messages” on page 125 for additional return values and for more information about those listed here.

Files

For C language programs, include the NetTAPE header file, **/usr/lpp/clnettape/inc/fcftpint.h**.

ctpclose or tpclose—Closing the tape file

Description

This call closes the tape file.

Syntax

Language	Programming Syntax
C	**int ctpclose (int** *tlu*, **int** *option* **)**
FORTRAN	**tpclose (** *tlu*, 0, *ret* **)**

Where:

tlu Is an integer (INTEGER*4) representing the tape logical unit number returned from the **ctpalloc** call.

option Is an integer (INTEGER*4) The following are valid values for the *option* parameter:

0 Reserved for future use by NetTAPE.

ret Is an integer (INTEGER*4) representing the return value.

Return Values

This function returns one of the following return values:

0	NetTAPE_OK
–6	NetTAPE_COMM_ERR
other	The errno value returned by the failing **close** function.

See “NetTAPE Tape Interface Return Values and Messages” on page 125 for additional return values and for more information about those listed here.

Files

For C language programs, include the NetTAPE header file, **/usr/lpp/clnettape/inc/fcftpint.h**.

ctpopen or tpopen—Opening the tape file

Description

This call opens a tape file for reading, writing, or updating (reading and writing).

Syntax

Language	Programming Syntax
C	**int ctpopen (int** *tlu*, **char *****allocparms*, **int** *mode* **)**
FORTRAN	**tpopen (** *tlu*, *allocparms*, *mode*, *ret* **)**

Where:

tlu Is an integer (INTEGER*4) representing the tape logical unit number returned by the **ctpalloc** call.

allocparms

Use *allocparms* to specify additional allocation parameters. A sample *allocparms* string is:

```
vol=myvol1 al dsn=another_dataset
```

allocparms can contain one or more of the following keywords:

ACL Specifies that you want to use the automatic cartridge loader (ACL) feature. ACL is supported on the 3480, 3490, and 3590 IBM tape devices. The ACL feature differs from ACF (automatic cartridge facility) in that ACL allows only sequential access to tapes in the cartridge loader while ACF can be used in a random access mode as a mini tape library.

You may specify **ACL** only for a device defined in **nettape.adm.config** with the operation mode ibmacl or ibmacf.

You must also specify either the **VOL**= option or the **VID**= option with the **ACL** option.

BLKSZ=*blocksize*
Specifies the size of the blocks or records. Use this option with the **RECLN**= and **RECFM**= options. This option does not apply to unformatted tapes (**RECFM**=**U**); if you specify both **RECFM**=**U** and **BLKSZ**=, **BLKSZ**= is ignored.

DSN=*dsname*
Specifies the name of a tape data set. The string *dsname* contains 1 to 44 characters. *dsname* is converted to upper case. If you omit **DSN**=, no data set name is used.

You must specify **DSN**= for standard label (**sl**) or ANSI label (**al**) tapes.

EX=*yyddd*

Specifies the expiration date for a **new** data set. *yyddd* is a Julian date. If you omit this option, the default is no expiration date.

Note: **EX**= and **RET**= are mutually exclusive. You can specify the longevity of the tape as either an expiration date (**EX**=.*yyddd*) or as a number of days from now (**RET**= *nnnn*).

FSEQ=*fseq*

Specifies the sequence number of the data set on the tape. The default is 1, the first data set of the tape.

GEN=*file_gen_num*

Specifies a 4-digit file generation number. If you omit this keyword, this field is set to blanks.

NL, SL, AL, BLP

Specifies the tape label type.

AL	ANSI X3.27-1987 (ISO 1001-1986) Labeled
BLP	Bypass Label Processing
NL	Unlabeled
SL	IBM EBCDIC Standard Labeled

You may type **NL**, **AL**, **BLP**, and **SL** in upper, lower, or mixed case. The default is **nl**

Notes:

1. Bypassing label processing may circumvent data set access restrictions. Therefore you must have special authority (controlled by an entry in **nettape.adm.config**) to use **BLP**.

   For more information, see “Defining the User Access Control List” on page 29.

2. When you specify **SL** on a write operation, NetTAPE writes a standard label record (VOL1,HDR1,HDR2) at the beginning of the tape volume.
3. For **AL** (ANSI standard label) tapes, NetTAPE supports ANSI version 3 standard labels.
4. NetTAPE supports **AL** or **SL** tapes on 8mm devices, but only for single volume data sets. Furthermore, you must provide sufficient room at the end of the tape for trailer labels.

To write to a tape (any label type) or to read from a **nl** (no label) tape, you must specify either all of **RECLN**=, **BLKSZ**=, and **RECFM**=, or none of the three.

To read from a labeled tape, you must specify **RECFM**=. Other information is read from the tape label. If you specify **RECLN**= or **BLKSZ**= and the values in the tape

label do not match your recorded values, **ctpopen** returns an error return code.

For standard label (**sl**) or ANSI label (**al**) tapes, you must also specify the **DSN**= option.

OWNER=*owner*
Specifies a 14-character string identifying the owner of the tape. If you omit this keyword, this field is set to blanks.

RECFM=*record_format*
Specifies the format of records on the tape. Supported values of *record_format* are:

U	Unformatted
F	Fixed
FB	Fixed Blocked

You can use **BLKSZ**= and **RECFM**= to change the blocksize and record length of formatted tapes. The default *record_format* is **U**, unformatted tapes.

RECLN=*record_length*
Specifies the length in bytes of logical records on the tape. Use this option with the **BLKSZ**= and **RECFM**= options.

RET=*nnnn* **Specifies the retention period for a new data set, in number of days.**

Note: **EX**= and **RET**= are mutually exclusive. You can specify the longevity of the tape as either an expiration date (**EX**= *yyddd*) or as a number of days from now (**RET**= *nnnn*).

The default value is infinity (no expiration date).

SRC=*source_category*
Specifies the source category from which a scratch volume is mounted. In some tape libraries, source category can be viewed as a scratch pool name. Specify *source_category* as a character string to use the device in manual mode; specify it as a number when using a library. If you don't specify **SRC**=, the category defaults to the definition in **nettape.adm.config**.

SUP_EOF
Specifies that NetTAPE ignore EOF tape marks and continue processing the tape.

If you omit this keyword, NetTAPE returns the NetTAPE_TEOF return code when it reaches EOF on a read operation.

SUP_EOV
Specifies that NetTAPE automatically mount the next volume (if necessary), when End of Volume (EOV) or End of Tape (EOT) is reached.

If you omit this keyword, NetTAPE returns the NetTAPE_EOV return code when it reaches EOV on a

read operation, or the NetTAPE_EOT return code when it reaches EOT on a write operation. When reading a tape, NetTAPE returns NetTAPE_EOV, when it reaches EOV on the last volume in the volume list.

For more information about EOT and EOV, see "Understanding NetTAPE Tape Positioning" on page 75.

For more information about return codes, see "NetTAPE Tape Interface Return Values and Messages" on page 125.

TAR=*target_category*
Specifies the target category to which a private volume is assigned. In some tape libraries, target categories can be viewed as private pool names. Specify *target_category* as a character string to use the device in manual mode; specify it as a number when using a library.

If you don't specify **TAR**=, the category defaults to the definition in **nettape.adm.config**.

TFMT=*tape_format*
Specifies the tape density. *tape_format* is a string specifying the tape recording format. It can have one of these values:

basic	Basic (uncompacted) mode
compacted	Compacted mode
800	800 BPI, 9 track (NRZI format)
1600	1600 BPI, 9 track (PE format)
6250	6250 BPI, 9 track (GCR format)

The keywords **basic** and **compacted** may be supplied in upper, lower, or mixed case. They may be abbreviated down to a single letter (**b** and **c**).

If you omit **TFMT**=, the default tape format is the format defined in SMIT when the device was configured.

VDIR=*vol_id_dir*
Specifies the name of the directory where NetTAPE is to store (on a write operation) or retrieve (on a read operation) the file containing the volume information associated with data set specified by **DSN**=*dsname*.

VDIR= is an optional keyword you can specify with the **VFILE** keyword.

VER=*version_num*
Specifies a 2-digit file version number. If you omit this keyword, this field is set to 0.

VFILE On a write operation:

Specifies that NetTAPE is to save volume information for the data set specified by *dsname* on the **–d** option. Each volume information file is permanently associated with the device pool where it is created. If you don't specify an esoteric device pool, you must use the particular device

pool you first specified, when you read the data set later on.

The volume information is saved in the file *dsname* in the **$HOME/.nettape**. To save the file in a different directory, specify that directory using the **VDIR** option.

If you want this information sent to standard output, use the **cltvols** command instead. See “cltvols—Obtaining information about tape volumes used” on page 100 for more information. For more information, see “Obtaining Volume Information Using the VFILE Option” on page 71.

On a read operation:

VFILE specifies that NetTAPE is to retrieve from **$HOME/.nettape** the volume information for the dataset specified by *dsname* on the **–d** option. If the volume information file is in a different directory, use the **VDIR** option to specify its location. For more information, see “Obtaining Volume Information Using the VFILE Option” on page 71.

VID=*int_volid*[**,***int_volid2***,...,***int_volid*]
Specifies the internal volume serial number for each volume in the list VOL=*volser*,*volser2*,...,*volsern*. The internal volume identifier is 1 to 6 characters and is converted to upper case.

This option is for labeled tapes only. Use the **VID**= option to specify an internal volume serial number that is different from the external volume serial number.

If you use the **VID**= option, you must also specify the **VOL**= option.

VOL=**scratch**
VOL=*volser*[**,***volser2***,...,***volsern*]
Specifies the volser (external volume serial number) of one or more tapes. A *volser* is 1 to 6 characters. *volser* arguments are converted to upper case.

For a read operation, you must specify the **VOL**= option unless you use the VFILE option to specify volume information.

For a write operation, **VOL**= is optional. If you omit **VOL**= or specify **VOL**=**scratch**, a scratch tape is mounted.

For labeled tapes, NetTAPE uses the external volume serial number as the internal volume serial number unless you specify an internal volume serial number using the **VID**= option.

mode Is an integer (INTEGER*4) specifying the tape mode:

1 Read
2 Output: open for output and allow rewinding
3 Update: open for update (read/write) and allow rewinding
4 Input with no rewind: open for input and avoid rewinding

5 Output with no rewind: open for output and avoid rewinding
6 Update with no rewind: open for update (read/write) and avoid rewinding

ret Is an integer (INTEGER*4) representing the return value.

Return Values

This function returns one of the following return values:

0	NetTAPE_OK
–6	NetTAPE_COMM_ERR
–17	NetTAPE_NOTPSRV
other	The errno value returned by the failing **open** function.

See “NetTAPE Tape Interface Return Values and Messages” on page 125 for additional return values and for more information about those listed here.

Files

For C language programs, include the NetTAPE header file, **/usr/lpp/clnettape/inc/fcftpint.h**.

ctpread or tpread—Reading the tape

Description

This call reads data from an open tape device.

Syntax

Language	Programming Syntax
C	**int ctpread (int** *tlu*, **void ***buffer*, **int** *length* **)**
FORTRAN	**tpread (** *tlu*, *buffer*, *length*, *ret* **)**

Where:

tlu Is an integer (INTEGER*4) representing the tape logical unit number returned from the **ctpalloc** call.

buffer Is a pointer (CHARACTER*(*)) to the size of the buffer.

length Is an integer (INTEGER*4) representing the number of bytes being read from the tape.

ret Is an integer (INTEGER*4) representing the return value. If the return value is greater than or equal to zero, it is the number of bytes read.

Return Values

If successful, this function returns the number of bytes read. If unsuccessful, it returns one of these return values:

−1 NetTAPE_TEOF
−2 NetTAPE_LOADPOINT
−3 NetTAPE_EOV
−5 NetTAPE_IOERR
−6 NetTAPE_COMM_ERR
−7 NetTAPE_INVALPARM - The record length was greater than the maximum record length specified on **ctpalloc** or **tpalloc**, or an invalid record length was specified.
−17 NetTAPE_NOTPSRV

See “NetTAPE Tape Interface Return Values and Messages” on page 125 for additional return values and for more information about those listed here.

Files

For C language programs, include the NetTAPE header file, **/usr/lpp/clnettape/inc/fcftpint.h**.

ctprew or tprew—Rewinding the tape

Description

This call rewinds the tape.

Syntax

Language	Programming Syntax
C	**int ctprew (int** *tlu* **)**
FORTRAN	**tprew (** *tlu*, *ret* **)**

Where:

tlu Is an integer (INTEGER*4) representing the tape logical unit number returned from the **ctpalloc** call.

ret Is an integer (INTEGER*4) representing the return value.

Return Values

This function returns one of the following return values:

0	NetTAPE_OK
–6	NetTAPE_COMM_ERR
–17	NetTAPE_NOTPSRV
other	The errno value returned by the failing **ioctl** function.

See “NetTAPE Tape Interface Return Values and Messages” on page 125 for additional return values and for more information about those listed here.

Files

For C language programs, include the NetTAPE header file, **/usr/lpp/clnettape/inc/fcftpint.h**.

ctpskpf or tpskpf—Skipping tape files

Description

This function skips forward or backward the specified number of tape marks on the tape.

Syntax

Language	Programming Syntax
C	**int ctpskpf (int** *tlu*, **int** *count* **)**
FORTRAN	**tpskpf (** *tlu*, *count*, *ret* **)**

Where:

tlu Is an integer (INTEGER*4) representing the tape logical unit number, returned from the **ctpalloc** call.

count Is an integer (INTEGER*4) representing the number of tape marks to be skipped. This can be a positive or negative number.

ret Is an integer (INTEGER*4) representing the return value.

Return Values

This function returns one of the following return values:

0	NetTAPE_OK
–1	NetTAPE_TEOF
–2	NetTAPE_LOADPOINT
–3	NetTAPE_EOV
–4	NetTAPE_EOT
–5	NetTAPE_IOERR
–6	NetTAPE_COMM_ERR
–17	NetTAPE_NOTPSRV
other	The errno value returned by the failing **ioctl** function.

See “NetTAPE Tape Interface Return Values and Messages” on page 125 for additional return values or for more information about those listed here.

Files

For C language programs, include the NetTAPE header file, **/usr/lpp/clnettape/inc/fcftpint.h**.

ctpskpr or tpskpr—Skipping tape records

Description

This function skips forward or backward the specified number of tape records on the tape.

Syntax

Language	Programming Syntax
C	**int ctpskpr (int** *tlu*, **int** *count* **)**
FORTRAN	**tpskpr (** *tlu*, *count*, *ret* **)**

Where:

tlu Is an integer (INTEGER*4) representing the tape logical unit number, returned from the **ctpalloc** call.

count Is an integer (INTEGER*4) representing the number of records to skip. The value can be positive or negative.

ret Is an integer (INTEGER*4) representing the return value.

Return Values

This function returns one of the following return values:

0	NetTAPE_OK
–1	NetTAPE_TEOF
–2	NetTAPE_LOADPOINT
–3	NetTAPE_EOV
–4	NetTAPE_EOT
–5	NetTAPE_IOERR
–6	NetTAPE_COMM_ERR
–17	NetTAPE_NOTPSRV
Other	The errno value returned by the failing **ioctl** function.

See “NetTAPE Tape Interface Return Values and Messages” on page 125 for additional return values and more information about those listed here.

Files

For C language programs, include the NetTAPE header file, **/usr/lpp/clnettape/inc/fcftpint.h**.

ctpunall or tpunall—Unallocating a tape device

Description

This call uses the tape unallocation call to stop the remote tape server and free internal control blocks. This is required by NetTAPE.

Syntax

Language	Programming Syntax
C	**int ctpunall (int** *tlu* **)**
FORTRAN	**tpunall (** *tlu*, *ret* **)**

Where:

tlu Is an integer (INTEGER*4) representing the tape logical unit number returned from the **ctpalloc** call.

ret Is an integer (INTEGER*4) representing the return value.

Return Values

This function returns one of the following return values:

0 NetTAPE_OK
–6 NetTAPE_COMM_ERR

See “NetTAPE Tape Interface Return Values and Messages” on page 125 for additional return values and for more information about those listed here.

Files

For C language programs, include the NetTAPE header file, **/usr/lpp/clnettape/inc/fcftpint.h**.

ctpvols or tpvols—Obtaining information about tape volumes used

Description

The **ctpvols** call returns information about the tape volumes used by the data set that is currently in use. When multiple volumes have been written, you can call **ctpvols** after **ctpclose** and before **ctpunall** to get the list of volumes. In this case, you must already have specified the volumes in the **ctpopen** calls, so you might not need to call **ctpvols**.

To have this information written to a file instead, specify the VFILE option on the **ctpalloc** subroutine. See “ctpalloc or tpalloc—Allocating a tape device” on page 104.

Syntax

Language	Programming Syntax
C	**int ctpvols (int** *tlu*, **int ***nvols*, **char ***bf* **)**
FORTRAN	**tpvols (** *tlu*, *nvols*, *bf* , *ret* **)**

Where:

tlu Is an integer (INTEGER*4) representing the tape logical unit number, returned from the **ctpalloc** call.

nvols Is an integer (INTEGER*4) representing the number of tape volumes, returned by **ctpvols**.

bf Is a pointer (CHARACTER*(*)) to a buffer allocated and returned by **ctpvols**. Once you have saved the contents of the buffer, free the buffer's memory space.

ret Is an integer (INTEGER*4) representing the return value.

Return Values

This function returns one of the following return values:

0	NetTAPE_OK
–1	NetTAPE_TEOF
–6	NetTAPE_COMM_ERR
–17	NetTAPE_NOTPSRV

See “NetTAPE Tape Interface Return Values and Messages” on page 125 for additional return values and for more information about those listed here.

Files

For C language programs, include the NetTAPE header file, **/usr/lpp/clnettape/inc/fcftpint.h**.

ctpweof or tpweof—Writing tape marks

Description

This call writes tape marks as specified.

Syntax

Language	Programming Syntax
C	**int ctpweof (int** *tlu*, **int** *count* **)**
FORTRAN	**tpweof (** *tlu*, *count*, *ret* **)**

Where:

tlu Is an integer (INTEGER*4) representing the tape logical unit number returned from the **ctpalloc** call.

count Is an integer (INTEGER*4) representing the number of tape marks to be written to the tape.

ret Is an integer (INTEGER*4) representing the return value.

Return Values

This function returns one of the following return values:

0	NetTAPE_OK
–6	NetTAPE_COMM_ERR
–17	NetTAPE_NOTPSRV
Other	The errno value returned by the failing **ioctl** function.

See “NetTAPE Tape Interface Return Values and Messages” on page 125 for additional return values and for more information about those listed here.

Files

For C language programs, include the NetTAPE header file, **/usr/lpp/clnettape/inc/fcftpint.h**.

ctpwrite or tpwrite—Writing to tape

Description

This call writes data to an open tape device.

Syntax

Language	Programming Syntax
C	**int ctpwrite (int** *tlu*, **void ***buffer*, **int** *length* **)**
FORTRAN	**tpwrite (** *tlu*, *buffer*, *length*, *ret* **)**

Where:

tlu Is an integer (INTEGER*4) representing the tape logical unit number returned by the **ctpalloc** call.

buffer Is a pointer (CHARACTER*(*)) to the buffer.

length Is an integer (INTEGER*4) representing the number of bytes being written to the tape.

ret Is an integer (INTEGER*4) representing the return value.

Return Values

This function returns one of the following return values:

nnn	The number of bytes written.
–1	NetTAPE_TEOF — Write failed because of device error; see associated message for details about the error.
–2	NetTAPE_LOADPOINT
–5	NetTAPE_IOERR
–6	NetTAPE_COMM_ERR
–7	NetTAPE_INVALPARM
–17	NetTAPE_NOTPSRV

See “NetTAPE Tape Interface Return Values and Messages” on page 125 for additional return values and for more information about those listed here.

Files

For C language programs, include the NetTAPE header file, **/usr/lpp/clnettape/inc/fcftpint.h**.

NetTAPE Tape Interface Return Values and Messages

Name	Value	Message
NetTAPE_OK	0	The operation completed successfully.
NetTAPE_TEOF	–1	A tape mark was hit on a read. Write failed because of device error; see associated message for details about the error.
NetTAPE_LOADPOINT	–2	The loadpoint was hit as it attempted to backspace past the beginning of the tape.
NetTAPE_EOV	–3	A tape mark was hit twice on a read.
NetTAPE_EOT	–4	End of the tape was hit on a write.
NetTAPE_IOERR	–5	A tape I/O error occurred.
NetTAPE_COMM_ERR	–6	A communication error in the NetTAPE network occurred.
NetTAPE_INVALPARM	–7	An invalid parameter was entered in a NetTAPE call or function.
NetTAPE_ALLINUSE	–10	All tape drives are in use. A maximum of 10 tape drives can be accessed at the same time.
NetTAPE_UNKNOWN_NODE	–11	The node was not found in the **parconf** file.
NetTAPE_COPNPAR_ERR	–12	The NetTAPE **OPNPAR** call failed.
NetTAPE_COPNSRV_ERR	–13	The NetTAPE **OPNSRV** call failed.
NetTAPE_MSGTOOLONG	–14	**ctpwrto** error. The message length exceeds the maximum 100 bytes.
NetTAPE_NOTPSRV	–17	No connection to a tape server is available. **ctpalloc** is not called.
NetTAPE_INVALCALL	–18	The requested function could not be performed because it is inappropriate. For instance, a **ctpopen** request for a tape that has not been allocated.
NetTAPE_SPEC_ALLOC_FAILURE	–30	The allocation request failed
NetTAPE_NODEVS_AVAILABLE	–31	No devices were available and either NOWAIT specified by user or **nettape.adm.config** specifies that devices are not to be queued.
NetTAPE_WAIT_TIME_EXP	–32	The maximum wait time for a queued request was exceeded.
NetTAPE_BLP_NOT_AUTHORIZED	–33	The user is not authorized for bypass label processing (BLP).
NetTAPE_OPER_NOT_AUTHORIZED	–34	The user lacks operator authorization, which is required for the attempted action. Operator authorization is set in **nettape.adm.config**.
NetTAPE_NO_DEFAULT_POOL	–35	No device pool was specified and no default device pool is defined in **nettape.adm.config**.
NetTAPE_NO_DEVS_AVAILABLE	–36	No devices are up (available) in the specified pool.
NetTAPE_NO_ACL_ACF_DEVICES	–37	No ACL or ACF devices are in the specified pool.
NetTAPE_CLTOPR_INVALID_VOLSER	–38	The volser was omitted on a request to mount a scratch tape.

Name	Value	Message
NetTAPE_INVALID_DEV_POOL	–39	An invalid device pool name was specified.
NetTAPE_INVALID_CATEGORY	–40	An invalid category name was specified.
NetTAPE_INVALID_ARGUMENT	–41	An invalid argument was specified.
NetTAPE_INVALID_HOST	–42	An invalid host name was specified.
NetTAPE_UNEXPECTED_CLTUNALL	–43	An invalid host name or userid was specified on a **cltunall** command.
NetTAPE_CLIENT_REQ_CANCEL	–44	The tape request was cancelled by the user.
NetTAPE_OPER_CANCEL1	–45	The tape request was cancelled by the operator.
NetTAPE_OPER_CANCEL2	–46	The queued mount request was cancelled by the operator.
NetTAPE_OPER_CANCEL3	–47	The tape request was cancelled, operator intervention required.
NetTAPE_LIBRARY_CANCEL	–80	The tape request was cancelled by the tape library manager.
NetTAPE_LIBRARY_VOLCHECK_IGNORE	–81	The requested tape label is different from the label found, but the tape to be used anyway.
NetTAPE_LIBRARY_ERROR	–82	A tape library hardware problem was encountered.
NetTAPE_LIBRARY_DMN_DOWN	–83	The tape library daemon is not running.
NetTAPE_LIBRARY_VOLCHECK_NO	–84	The requested tape label is different from the label found. The request is cancelled because operator intervention is required.
NetTAPE_LIBRARY_VOLSER_UNKNOWN	–85	The specified library volume is unrecognized.
NetTAPE_LIBRARY_DOWN	–86	The tape library manager is not running.
NetTAPE_INTERNAL_ERROR	–100	NetTAPE internal error.
NetTAPE_START_CLUTIL_FAILURE	–101	The clutil daemon could not be started.
NetTAPE_MKDEV_FAILURE	–102	The tape pseudo device could not be created.
NetTAPE_CHOWN_FAILURE	–103	**chown** failed for a device special file.
NetTAPE_CLUTIL_FAILURE	–104	The clutil daemon failed.
NetTAPE_CLUTIL_STICKY_BIT	–105	Installation error. NetTAPE not installed using root.
NetTAPE_CHOWN_INVALID_USERID	–106	The user is does not have a userid on the node containing the tape device.
NetTAPE_GETDEVNO_ERR	–107	The clutil daemon could not obtain the device number for an IBM 3494 tape library.
NetTAPE_NO_NTA_CONFIG	–120	NetTAPE could not find **nettape.config**.
NetTAPE_INVALID_NTA_CONFIG	–121	An error was found in **nettape.config**.
NetTAPE_CONN_STSDMN_FAILURE	–122	The tape client failed to connect to the status daemon.
NetTAPE_SL_VOLCHECK	–140	A standard label tape with an incorrect volser was mounted.
NetTAPE_AL_VOLCHECK	–141	An ANSI label tape with an incorrect volser was mounted.
NetTAPE_SL_AL_VOLCHECK	–142	A standard label tape was requested, but an ANSI label tape was mounted.

Name	Value	Message
NetTAPE_AL_SL_VOLCHECK	−143	An ANSI label tape was requested, but a standard label tape was mounted.
NetTAPE_SL_NL_VOLCHECK	−144	A standard label tape was requested, but an unlabeled tape was mounted.
NetTAPE_AL_NL_VOLCHECK	−145	An ANSI label tape was requested, but an unlabeled tape was mounted.
NetTAPE_NL_AL_VOLCHECK	−146	An unlabeled tape was requested, but an ANSI label tape was mounted.
NetTAPE_NL_SL_VOLCHECK	−147	An unlabeled tape was requested, but a standard label tape was mounted.
NetTAPE_INVALID_HDR1_DSN	−148	An incorrect HDR1 header label was found.
NetTAPE_INVALID_BLK_CNT	−149	An incorrect block count was found in the EOF1 trailer label.
NetTAPE_VFILE_DSN_INUSE	−160	The VFILE file is in use by another user.
NetTAPE_VFILE_POOL_CONFLICT	−161	The device pool specified when the VFILE file was created differs from the one on a call to read the VFILE file.
NetTAPE_VFILE_UPDT_LOCK_ERR	−162	An error occurred while updating the VFILE file's lock file.
NetTAPE_VFILE_UNLOCK_ERR	−163	An error occurred while unlocking the VFILE file.
NetTAPE_VFILE_CREATE_ERR	−164	The VFILE file could not be created.
NetTAPE_VFILE_RWFLAG_ERR	−165	For a command that involves reading from the VFILE file: the file does not permit read access. For a command that involves writing to the VFILE file: the file does not permit write access.
NetTAPE_VFILE_RETRIEVE_ERR	−166	The VFILE file could not be read.
NetTAPE_VFILE_NO_HOME_DIR	−167	The HOME environment variable is not defined.

Appendix A. NetTAPE Commands Usage Examples

This appendix provides examples of using NetTAPE commands with the basic AIX backup commands, **tar**, **cpio**, **dd**, **backup**, and **restore**.

Using tar with Labeled Tapes

The following commands write to multiple tape files, on a single labeled tape, using **tar** commands. The **cltopen** command is issued between each **tar** to specify a different data set name and file sequence number.

```
#  allocate a 3494 tape device with dataset name d1 and file sequence 1
#  standard label tape
#  tar file1 to the tape
cltalloc -P 3494 -f mytape -d d1 -s 1 -l sl
tar -cvf mytape.1 file1

#  now open the tape with dataset name d2 and file sequence 2
#  tar file2 to the tape
cltopen -f mytape -d d2 -s 2
tar -cvf mytape file2

#  now let's get the 2 files off the tape
#  open the tape to dataset name d1 and file sequence 1
#  restore file1 from tape
cltopen -f mytape -d d1 s 1
tar -xvf mytape

#  open the tape to dataset name d2 and file sequence 2
#  restore file2 from tape
cltopen -f mytape -d d2 s 2
tar -xvf mytape

#  unallocate the tape device
cltunall -f mytape
```

Using tar, cpio, dd, and backup/restore with Multi-volume Data Sets

Certain allocation options are required when you use the tar, dd, and cpio commands with multi-volume data sets. These options also vary depending on whether a labeled tape is used.

For unlabeled tapes (NL):
To write to the tape, you must specify the allocation option SUP_EOV. To read from the tape, you must specify the entire volume list, as well as the SUP_EOV and SUP_EOF options.

Here's an example using the **tar** command:

© Copyright IBM Corp. 1996

```
#  allocate a 3490 device using the suppress end of volume option
#  using a scratch tape
cltalloc -P 3490B -f mytape -o "SUP_EOV"

#  tar a large directory to tape which I know will span volumes
tar cvf mytape /large_directory

#  find out the volume serial numbers since I didn't request
#  any specific volumes and used scratch tapes
cltvols -f mytape

#  open the device with the volume list and the suppress end
#  of volume and suppress end of file options
cltopen -f mytape -v VOL1,VOL2,VOL3 -o "SUP_EOV SUP_EOF"

#  restore the large directory
tar -xvf mytape

#  unallocate the device
cltunall -f mytape
```

For labeled tapes (AL or SL):
To write to the tape, you must specify the SUP_EOV allocation option. To read from the tape, you must specify the entire volume list, as well as the SUP_EOV option.

Here's an example using the **tar** command:

```
#  allocate a 3490 device using the suppress end of volume option
#  and a standard label scratch tape
cltalloc -P 3490B -f mytape -o "SUP_EOV" -l sl

tar cvf mytape /large_directory
cltvols -f mytape
cltopen -f mytape -v VOL1,VOL2,VOL3 -o "SUP_EOV"
tar -xvf mytape
cltunall -f mytape
```

Although the above examples are for **tar**, you must use the same options for **cpio**, **dd**, and **backup**/**restore**.

Using the backup/restore Commands

When backing up large amounts of data, specify the blocksize on the restore. If you think you'll need multiple volumes, you must also specify the option SUP_EOV on the allocations. See “Using tar, cpio, dd, and backup/restore with Multi-volume Data Sets” on page 129 for more information.

Here's an example:

```
#  allocate a 3490 device using scratch tape
cltalloc -P 3490B -f mytape

#  backup everything in the current directory to tape
find . -print | backup -vif mytape

#  get the volume serial
cltvols -f mytape

#  unallocate the device
cltunall -f mytape

#  allocate the device for restore using the volume from the
#  backup
cltalloc -P 3490C -f mytape -v VOL1

#  restore the data specifying blocksize of 51200
#  dd is required when using restore with tape, see the
#  restore manpage
dd if=mytape bs=51200 | restore -xvgf -

#  unallocate the device
cltunall -f mytape
```

Using the cpio Command

When using **cpio** to backup large files, specify the blocksize. If you think you'll need multiple volumes, you must also specify the option SUP_EOV on the allocations. See “Using tar, cpio, dd, and backup/restore with Multi-volume Data Sets” on page 129 for more information.

Here's an example:

```
#  allocate a 3490 device using scratch tape
cltalloc -P 3490B -f mytape

#  cpio the current directory
#  the blocksize is specified with C32.  This will result
#  in a blocksize of 16k  (32 x 512).
find . -print | cpio -ovdC32 > mytape

#  get the volume serial
cltvols -f mytape

#  open the device specifying the volume serial
cltopen -f mytape -v VOL1

#  restore the tape, again using the blocksize 32
cpio -idmvC32 < mytape

#  unallocate the device
cltunall -f mytape
```

Using DB2 PE Database's backup/restore Commands

To **backup**/**restore** a DB2 database to **mytape**, you need to specify the following on the DB2 commands:

- The full path name of the NetTAPE device (e.g., /u/curly/mytape),
- The BUFFER parameter, which specifies the buffer size in 4K byte blocks. The resulting block size (BUFFER n * 4096) must be less than or equal to the value you specified on the MAX_DATA option when you issued the **cltalloc** command to allocate **mytape**.

For example:

```
db2 backup database sample to /u/curly/mytape buffer 8
db2 restore database sample from /u/curly/mytape buffer 8
```

When running DB2 backup spanning multiple volumes, you must specify SUP_EOV option on the **cltalloc** command. When running DB2 restore spanning multiple volumes, you must specify all of the following on the **cltalloc** command:

- The SUP_EOV option
- The SUP_EOF option
- The complete list of volumes for the restore operation.

Appendix B. NetTAPE API Usage Examples

Here are two examples that show how to perform tape operations using the NetTAPE API. These examples can also be found in **/usr/lpp/nettape/samples/api**

Example 1

The example below shows the following sequence of tasks:

1. Allocating an IBM 3480 tape device
2. Opening the tape file
3. Reading a block of data
4. Rewinding the tape file
5. Writing a block of data
6. Closing the tape file
7. Unallocating the tape device.

```
#include <stdio.h>
#include <fcftpint.h>    /* include file for NetTAPE API */


main(int argc, char **argv)
{

     int  istat;
     int  iunit = 0;
     int  blksz;
     char tpargsff4096“;
     char buf1ff“ = "ABCDEFGHIJKLMNOPQRSTUVWXYZ1234567890";
     char buf2ff256“;


     blksz = strlen(buf1);
     sprintf(tpargs,"POOL=3480 VOL=XYZ300 ");

     /*
      * Request a tape device from the 3480 device pool
      *  and mount the tape volume
      */

     printf("Requesting a tape device...\n");
     istat=ctpalloc(&iunit,NULL,8192,tpargs,NULL);

     if(istat != 0) {
       fprintf(stderr,"Error %d connecting to server \n",istat);
       exit(1);
     }

     printf("Opening a tape file...\n");
     istat=ctpopen(iunit,"",3);

     if(istat != 0) {
       fprintf(stderr,"Error %d opening tape\n",istat);
       exit(1);
     }
```

© Copyright IBM Corp. 1996

```
                        /*
                         *   Write one block
                         */

                        printf("Writing data... (buf1 = %s)\n", buf1);
                        istat=ctpwrite(iunit,buf1,blksz);
                        if(istat < 0) {
                           fprintf(stderr,"Error %d writing tape\n",istat);
                           exit(1);
                        }

                        /*
                         *   Rewind the tape
                         */

                       printf("Rewinding the tape...\n");
                       istat=ctprew(iunit);
                       if(istat != 0) {
                          fprintf(stderr,"Error %d rewinding tape \n",istat);
                          exit(1);
                       }

                        /*
                         *   Read one block
                         */

                       printf("Reading data... (buf2 = %s)\n", buf2);
                       istat=ctpread(iunit,buf2,blksz);
                       if(istat < 0) {
                          fprintf(stderr,"Error %d reading tape\n",istat);
                          exit(1);
                       }
                       printf("After data read (buf2 = %s)\n", buf2);

                       /*
                        * Close the tape file
                        */

                       printf("Closing the tape...\n");
                       istat=ctpclose(iunit,0);
                       if(istat != 0) {
                          fprintf(stderr,"Error %d closing tape\n",istat);
                          exit(1);
                       }

                       /*
                        * Unallocate the tape device
                        */

                       printf("Unallocating the tape...\n");
                       istat=ctpunall(iunit);
                       if(istat != 0) {
                          fprintf(stderr,"Error %d disconnect from server\n",istat);
                          exit(1);
                       }
```

```
    exit(0);
}
```

Example 2

The example below shows the following sequence of tasks:

1. Allocating an STK Silo tape device
2. Opening the tape file
3. Writing 600 blocks of data
4. Closing the tape file
5. Retrieving the list of volume IDs for the previous write operation
6. Reading from the tape file
7. Closing the tape file
8. Unallocating the tape device.

```
#define L_VID 8

#include <stdio.h>
#include <fcftpint.h>    /* include file for NetTAPE API */


main(int argc, char **argv)
{

char *volbuff1,*volbuff2,*s;
int   nvols,i;

     int  istat;
     int  iunit = 0;
     int  blksz;
     char tpargsfff4096“;
     char buffff“ = "ABCDEFGHIJKLMNOPQRSTUVWXYZ1234567890";


     blksz = strlen(buf);
     strcpy(tpargs,"POOL=SILO_1 VOL=200058 ");  /* use scratch mount */

     /*
      *  Request a tape device from the SILO_1 device pool
      *  and use the scratch tapes
      */

     printf("Requesting a tape device...\n");
     istat=ctpalloc(&iunit,NULL,8192,tpargs,NULL);

     if(istat != 0) {
       fprintf(stderr,"Error %d connecting to server \n",istat);
       exit(1);
     }

     /*
      *  Open the tape for write operation
      */

     printf("Opening a tape device...\n");
```

```
istat=ctpopen(iunit,"",2);

if(istat != 0) {
  fprintf(stderr,"Error %d opening tape for write\n",istat);
  istat=ctpunall(iunit);
  exit(1);
}

/*
 *   Write 600 blocks
 */

 printf("Writing data...\n");
 for(i=0;i<600;i++) {
    istat=ctpwrite(iunit,buf,blksz);
    if(istat < 0) {
      fprintf(stderr,"Error %d writing tape\n",istat);
      istat=ctpclose(iunit,0);
      istat=ctpunall(iunit);
      exit(1);
    }
 }

/*
 *  Close the tape file
 */

 printf("Closing the tape...\n");
 istat=ctpclose(iunit,0);
 nvols = 10;
 volbuff1 = (char *) malloc(nvols*L_VID);

 /*
  *  Retrieve a list of volume IDs for the previous write operation
  */

 istat=ctpvols(iunit,&nvols,volbuff1);
 printf("istat:%i nvols:%i \n",istat,nvols);
 if(istat < 0) {
   fprintf(stderr,"Error %d calling ctpvols\n",istat);
   istat=ctpclose(iunit,0);
   istat=ctpunall(iunit);
   exit(1);
 }
 printf("ctpvols returned (nvols = %i; volbuff1 = %s)\n", nvols,
         volbuff1);

 volbuff2 = (char *) malloc(nvols*L_VID + 10);
 strcpy(volbuff2,"VOL=");
 for(s=volbuff1,i=0;i<nvols;i++,s += L_VID) {
    printf("volume #%i %s \n",i+1,s);
    if (i != 0) strcat(volbuff2,",");
    strcat(volbuff2,s);
 }

 /*
  *  Open the tape for read operation
  */
```

```
                    printf("open parms:%s \n",volbuff2);
                    printf("Opening a tape device...\n");
                    istat=ctpopen(iunit,volbuff2,1);

                    if(istat != 0) {
                      fprintf(stderr,"Error %d opening tape for read\n",istat);
                      istat=ctpunall(iunit);
                      exit(1);
                    }


                   /*
                    *   Read tape
                    */

                  printf("Reading data...\n");
                  for(;;) {
                    istat=ctpread(iunit,buf,blksz);
                    if(istat == -1) {
                       fprintf(stderr,"Tape Mark (EOT) hit        \n",istat);
                    } else if(istat == -3 ) {
                       fprintf(stderr,"End of Volume (EOV) hit        \n",istat);
                       break;
                    } else if(istat < 0   ) {
                       fprintf(stderr,"Error %d reading tape\n",istat);
                       break;
                    }
                  }

                  /*
                   * Close the tape file
                   */

                  printf("Closing the tape...\n");
                  istat=ctpclose(iunit,0);
                  if(istat != 0) {
                     fprintf(stderr,"Error %d closing tape\n",istat);
                     istat=ctpunall(iunit);
                     exit(1);
                  }

                  /*
                   * Unallocate the tape device
                   */

                  printf("Unallocating the tape...\n");
                  istat=ctpunall(iunit);
                  if(istat != 0) {
                     fprintf(stderr,"Error %d unallocating the tape device\n",istat);
                     exit(1);
                  }

                  exit(0);
              }
```

Index

Special Characters

/etc/services, registering in 26, 29
.netrc file
  about 41
  for NetTAPE 41
  for NetTAPE users 41
  for system administrator 41
  sample 41
.netrc file, verifying 41

Numerics

3494 tape library daemon 44

A

adding device 47
administration tasks 43
administrative commands, NetTAPE 51
ADSM, operation with 9
allocating an NetTAPE tape device 81
anonymous FTP server xiii
API usage examples 133
APIs, list of 103
audience of this book ix
authorization for NetTAPE functions 29
automatic volume recognition 33
AVR
  See automatic volume recognition
avr daemon 44
AVR daemon, scanning interval 36

B

book, how to use ix
book, terms used xi
books, related x

C

category, default private tape 35
category, default scratch tape 35
changes, summary of xiv
cl3494d daemon 44
client.tapepos 26
client.wbh 76
CLIO/S, coexistence with 9, 11
CLIOBIN environment variable 65
CLIODEB environment variable 65
CLIONODE environment variable 66
CLIOPATH environment variable 66
CLIOSYS environment variable 66
CLIOTMO environment variable 66
closing a tape file 110
closing the volume information file 91
clsilod daemon 44
cltalloc command 81
cltclntd 64
cltclntd daemon 44
cltclose command 91
cltopen command 93
cltopr command 52
cltoprgcommand 60
cltterm command 62
cltunall command 99
cltvols command 100
clutil daemon 44
coexistence with CLIO/S 11
coexistence with other products 9
commands
  cltalloc command 81
  cltclose command 91
  cltopen command 93
  cltopr command 52
  cltoprg command 60
  cltterm command 62
  cltunall 99
  cltvols command 100
  examples of using together 69
commands, list of 79
commands, list of administrative 51
compiling 103
configuration
  adding device 47
  deleting device 47
  files, creating and customizing 21
configuring
  NetTAPE 21
  tape library 43
copying files from anonymous FTP server xiii
ctpalloc subroutine 104
ctpclose subroutine 110
ctpopen subroutine 111
ctpread subroutine 117
ctprew subroutine 118
ctpskpf subroutine 119
ctpskpr subroutine routine 120
ctpunall subroutine 121
ctpvols subroutine 122
ctpweof subroutine 123
ctpwrite subroutine 124

© Copyright IBM Corp. 1996

D

daemon
  cltclntd 64
  tape client 64
daemon error log 63
daemons, about 44
DBG environment variable 66
default device pool 35
default private tape category 35
default scratch tape category 35
default scratch tape pool 35
deleting device 47
device 31
  adding 47
  defining to NetTAPE 31
  deleting 47
  failure to deallocate 64
  reserving 48
  resetting 48
  shared 34
  state, specifying 32
  states, about 47
  supported 7
device address, STK tape library 32
device pool 28, 31
  about 27
  default, defining 35
  defining 31
  esoteric 28
  esoteric, defining 34
  finding available 70
documentation, where to find xi
domain, operator 32
downloading files from anonymous FTP server xiii
dynamic allocation for tape server 104

E

effective user id, restrictions on using 13
end of tape handling 76
entry in parconf file 24
environment variables
  CLIOBIN 65
  CLIODEB 65
  CLIONODE 66
  CLIOPATH 66
  CLIOSYS 66
  CLIOTMO 66
  DBG 66
  setting 64
error log, daemon 63
esoteric device pool 34
  creating 34
  invalid 64
  planning 28
examples
  API 133

F

failure
  restarting NetTAPE 64
  to deallocate device 64
file
  .netrc 41
  downloading from anonymous FTP server xiii
  header 103
  makefile 103
  nettape.adm.config 27
  nettape.config 26
  parconf 22
  README xii
FTP server, anonymous xiii
function calls, examples of using together 70

G

graphical user interface
  See GUI
GUI
  about 5
  customizing 43
  README 43
  starting 46

H

hardware, supported 7
header file 103
help, online xii
how to use this book ix

I

IBM tape library
  See tape library
installation
  after 17
  information about 43
intervention required, tape library 31

L

library
  See tape library
library server node 30
library, NetTAPE 103
linking 103
local host
  specifying with CLIONODE 66
log, error 63

M

makefile 103
man pages
  tips on using xiii
  where to find xii
MANPATH environment variable xii
manual, where to find xi
manuals, related x
messages 125
mode, operation 32
mount queue settings 36
mount.queue 36
mount.queue.max.wait 36
mount.queue.scan.interval 36
MVS
  sharing tape device with 49
  tapes, volume information 71

N

name, tape library 32
NetTAPE
  ADSM, operation with 9
  CLIO/S, coexistence with 9
  commands, examples of using together 69
  function calls, examples of using together 70
  header file 103
  makefile 103
  operation with other products 9
  restrictions 13
  starting or restarting 46
  stopping 46
  subroutine library 103
  subroutines, examples of using together 70
  tips on using xii
nettape.adm.config
  authorization for NetTAPE functions 29
  automatic volume recognition 33
  AVR daemon, scanning interval 36
  changing 40
  client.wbh 76
  default device pool 35
  default private tape category 35
  default scratch tape category 35
  device pool 31
  device pool, about 27
  device state 32
  esoteric device pool 28, 34
  mount queue setting 36
  operation mode, types 32
  operator domain 32
  sample file 37
  shared device 34
  stsdmn.blp 29
  stsdmn.ibmacs 30
nettape.adm.config *(continued)*
  stsdmn.library.retry 30
  stsdmn.library.volcheck 31
  stsdmn.operators 29
  stsdmn.operators.adm 29
  stsdmn.operators.view 29
  stsdmn.stkacs 30
  stsdmn.util.portno 29
  tape library device address 32
  tape library name 32
  tape pool 27, 31
  user access control list 29
  utility daemon port number 29
nettape.adm.config file, about 27
nettape.config
  client.tapepos 26
  customizing 26
  status daemon host name 26
  status daemon port number 26
  stsdmn.hostname 26
  stsdmn.portno 26
  tape position update interval 26
nettaped daemon 44
node, library server 30
notation, syntax xi

O

objectives for this manual ix
online help, where to find xii
opening a tape device for use 111
operation mode
  IBMACF 32
  IBMACL 32
  IBMACS 32
  STKACS 32
operation with other products 9
operator command 52
operator domain 32
operator GUI, starting 46
organization of this book ix

P

parconf file
  about 22
  sample 22
  sample entry 24
  syntax 24
pool 27, 31
pool, default private tape 35
pool, default scratch tape 35
port number, status daemon 26
port number, utility daemon 29
position, tape 26

positioning, tape 75
private tape category, default 35
private tape pool, default 35
programming information 103
programming interfaces, NetTAPE 103
publications, related x
pvl daemon 44

R

readers of this book ix
reading a tape 117
README, where to find xii
removing device 47
requirements for NetTAPE 7
reserving, device 48
resetting, device 48
restarting NetTAPE, failure 64
restrictions 13
return values, tape 125
rewinding a tape 118

S

sample file
  .netrc. 41
  parconf 22
scratch tape pool, default 35
shared device 34
sharing tape device with MVS 49
skipping
  tape files 119
  tape records 120
software, supported 7
starting a remote tape server 104
starting NetTAPE 46
state, specifying device 32
states, about device 47
status daemon, stopping 46
STK silo daemon 44
STK tape library
  See tape library
stopping
  NetTAPE 46
  status daemon 46
  tape client daemon 62, 64
stsdmn.blp 29
stsdmn.hostname 26
stsdmn.ibmacs 30
stsdmn.library.retry 30
stsdmn.library.volcheck 31
stsdmn.operators 29
stsdmn.operators.adm 29
stsdmn.operators.view 29
stsdmn.portno 26
stsdmn.stkacs 30
stsdmn.util.portno 29
subroutine library 103
subroutines, examples of using together 70
summary of changes xiv
syntax for parconf entry 24
syntax notation in book xi

T

tape category, default private 35
tape category, default scratch 35
tape client daemon
  about 44
  stopping 62, 64
tape device
  See also device
  allocating by command 81
  failure to deallocate 64
  sharing with MVS 49
  unallocating 99, 121
tape drive
  See device
tape drives, supported 7
tape label, errors 31
tape library
  configuring 43
  daemon 30
  defining to NetTAPE 30
  device address 32
  intervention required 31
  name 32
tape library manager retry interval 30
tape pool 27, 31
tape position information 26
tape positioning 75
tape return values 125
tape server daemon 44
tape volume information 122
tapesrv daemon 44
tasks
  administration 43
  user 69
terms, used in book xi
tips xii
tpalloc subroutine 104
tpclose subroutine 110
tpopen subroutine 111
tpread subroutine 117
tprew subroutine 118
tpskpf subroutine 119
tpskpr subroutine routine 120
tpunall subroutine 121
tpvols subroutine 122
tpweof subroutine 123

tpwrite subroutine 124
troubleshooting tips
  for administrators 64
  for users 77

U

unallocating a tape device 99
unfinished job, handling 48
user access control list 29
user tasks 69
using this book ix
utility daemon 44

V

VFILE
  administration considerations 28
  closing the file 91
  format 71
  how to use 71
  option 84, 96, 108, 114
  sample 71
  with MVS tapes 71
volume information file
  See VFILE

W

World Wide Web, NetTAPE documentation on xii
write-behind processing 76
writing
  tape marks 123
  to tape 124